SONY

DIGITAL AUDIO MIXER

DMX-R100

8CH ANALOG LINE IN BOARD

DMBK-R101

8CH ANALOG LINE OUT BOARD

DMBK-R102

8CH AES/EBU DIO BOARD

DMBK-R103

8CH SAMPLING RATE CONVERTER DI BOARD

DMBK-R104

8CH INSERTION BOARD

DMBK-R105

INTERFACE BOARD FOR ADAT®

DMBK-R106

INTERFACE BOARD FOR TDIF

DMBK-R107

SERVICE MANUAL

Volume 2 1st Edition

⚠警告

このマニュアルは，サービス専用です。
お客様が，このマニュアルに記載された設置や保守，点検，修理などを行うと感電や火災，人身事故につながることがあります。
危険をさけるため，サービストレーニングを受けた技術者のみご使用ください。

⚠WARNING

This manual is intended for qualified service personnel only.
To reduce the risk of electric shock, fire or injury, do not perform any servicing other than that contained in the operating instructions unless you are qualified to do so. Refer all servicing to qualified service personnel.

⚠WARNUNG

Die Anleitung ist nur für qualifiziertes Fachpersonal bestimmt.
Alle Wartungsarbeiten dürfen nur von qualifiziertem Fachpersonal ausgeführt werden. Um die Gefahr eines elektrischen Schlages, Feuergefahr und Verletzungen zu vermeiden, sind bei Wartungsarbeiten strikt die Angaben in der Anleitung zu befolgen. Andere als die angegeben Wartungsarbeiten dürfen nur von Personen ausgeführt werden, die eine spezielle Befähigung dazu besitzen.

⚠AVERTISSEMENT

Ce manual est destiné uniquement aux personnes compétentes en charge de l'entretien. Afin de réduire les risques de décharge électrique, d'incendie ou de blessure n'effectuer que les réparations indiquées dans le mode d'emploi à moins d'être qualifié pour en effectuer d'autres. Pour toute réparation faire appel à une personne compétente uniquement.

目次

このマニュアルについて

本書の目的 ..... 5(J)
構成 ..... 5(J)
関連マニュアル ..... 5(J)

7. Board Layouts

Index 7-1
7-1. DMX-R100 7-2
AA-99 7-2
AA-101 7-4
AC-199/199A/199B 7-5
AD-158 7-6
ASW-57 7-5
CN-1771 7-10
CN-1772 7-12
CN-1788 7-13
CN-1789 7-14
CN-1941 7-15
CN-2062 7-15
CP-339 7-16
CPU-284 7-18
DA-137 7-20
DC-102 7-24
FP-116 7-26
HP-94 7-15
IF-735 7-28
LC-38 7-30
LED-332 7-31
MB-836 7-37
MIX-39 7-32
MT-133/133A 7-34
MT-134 7-36
SW-2 7-38
SW-996 7-39
TB-15 7-15
VR-252 7-40
7-2. DMBK-R101 7-42
ADC-39 7-42
7-3. DMBK-R102 7-46
DAC-36 7-46

7-4. DMBK-R103 7-48
DIO-51 7-48
7-5. DMBK-R104 7-49
DI-35 7-49
7-6. DMBK-R105 7-50
ADA-56 7-50
7-7. DMBK-R106 7-52
IF-736 7-52
7-8. DMBK-R107 7-53
IF-737 7-53

8. Schematic Diagrams

Index 8-1
8-1. DMX-R100 8-2
AA-99 8-2
AA-101 8-4
AC-199/199A/199B 8-13
AD-158 8-8
ASW-57 8-13
CN-1771 8-14
CN-1772 8-15
CN-1788 8-16
CN-1789 8-17
CN-1941 8-55
CN-2062 8-95
CP-339 8-18
CPU-284 8-20
DA-137 8-29
DC-102 8-39
FP-116 8-41
HP-94 8-131
IF-735 8-42
LC-38 8-54
LED-332 8-57
MB-836 8-58
MIX-39 8-62
MT-133/133A 8-91
MT-134 8-92
SW-2 8-93
SW-996 8-94
TB-15 8-95
VR-252 8-96
8-2. DMBK-R101 (ADC-39 board) 8-104
ADC-39 8-104
8-3. DMBK-R102 (DAC-36 board) 8-107
DAC-36 8-107

8-4. DMBK-R103 (DIO-51 board) 8-110
DIO-51 8-110
8-5. DMBK-R104 (DI-35 board) 8-114
DI-35 8-114
8-6. DMBK-R105 (ADA-56 board) 8-119
ADA-56 8-119
8-7. DMBK-R106 (IF-736 board) 8-124
IF-736 8-124
8-8. DMBK-R107 (IF-737 board) 8-126
IF-737 8-126
8-9. Frame Wiring 8-130
Frame Wiring 8-130

このマニュアルについて

本書の目的

本書はデジタルオーディオミキサ DMX-R100 シリーズ (下記機種) のサービスマニュアル Volume 2 です。
DMX-R100, DMBK-R101, DMBK-R102, DMBK-R103, DMBK-R104, DMBK-R105, DMBK-R106, DMBK-R107.
本書は，システム / サービスエンジニアの方々にご使用いただくことを想定し，これらの機種の部品レベルまでのサービスを前提とした情報を記載しています。

構成

本書の構成を把握していただくために，全項目の概略を以下に説明します。

Section 7　Board Layouts
基板のマウント図を記載しています。

Section 8　Schematic Diagrams
回路図，フレーム図を記載しています。

関連マニュアル

本書には，この「サービスマニュアル Volume 2」のほかに，下記のマニュアルが用意されています。
入手を希望される方は，お買い上げいただいた機器の販売担当にお問い合わせください。

- DMX-R100 シリーズ サービスマニュアル Volume 1 (別途用意)
  DMX-R100 シリーズの部品レベルまでのサービスを前提とした情報 (サービスインフォメーション，電気調整，スペアパーツ，半導体，ブロック図) を記載したマニュアルです。
  部品番号：9-976-887-0X

- DMX-R100 取扱説明書 (DMX-R100 に付属)
  部品番号 : 3-868-264-0X
- DMBK-R101/R102/R103/R104/R105/R106/R107 取扱説明書 (各機に付属)
  部品番号 : 3-203-479-0X
  これらのマニュアルは DMBK-R100 シリーズのシステムを実際に運用および操作するのに必要なマニュアルです。
  サービスマニュアル Volume 1 の第 1 章 “取扱説明” にも記載されています。

- “Semiconductor Pin Assignments” CD-ROM 版 (別途用意)
  この “Semiconductor Pin Assignments” CD-ROM 版は，コミュニケーションシステムソリューションネットワークカンパニーの機器に使用されている半導体を検索することができます。
  この CD-ROM で検索できない半導体は，その半導体が使用されている機種のサービスマニュアルに記載されています。サービスマニュアルには，その機種に使用されているすべての半導体一覧とその ID 番号を記載していますので，この CD-ROM 版と合わせて使用してください。
  部品番号：9-968-546-XX

Table of Contents

Manual Structure

Purpose of this manual ..... 5(E)
Contents ..... 5(E)
Related manuals ..... 5(E)

7. Board Layouts

Index 7-1
7-1. DMX-R100 7-2
AA-99 7-2
AA-101 7-4
AC-199/199A/199B 7-5
AD-158 7-6
ASW-57 7-5
CN-1771 7-10
CN-1772 7-12
CN-1788 7-13
CN-1789 7-14
CN-1941 7-15
CN-2062 7-15
CP-339 7-16
CPU-284 7-18
DA-137 7-20
DC-102 7-24
FP-116 7-26
HP-94 7-15
IF-735 7-28
LC-38 7-30
LED-332 7-31
MB-836 7-37
MIX-39 7-32
MT-133/133A 7-34
MT-134 7-36
SW-2 7-38
SW-996 7-39
TB-15 7-15
VR-252 7-40
7-2. DMBK-R101 7-42
ADC-39 7-42
7-3. DMBK-R102 7-46
DAC-36 7-46

7-4. DMBK-R103 7-48
DIO-51 7-48
7-5. DMBK-R104 7-49
DI-35 7-49
7-6. DMBK-R105 7-50
ADA-56 7-50
7-7. DMBK-R106 7-52
IF-736 7-52
7-8. DMBK-R107 7-53
IF-737 7-53

8. Schematic Diagrams

Index 8-1
8-1. DMX-R100 8-2
AA-99 8-2
AA-101 8-4
AC-199/199A/199B 8-13
AD-158 8-8
ASW-57 8-13
CN-1771 8-14
CN-1772 8-15
CN-1788 8-16
CN-1789 8-17
CN-1941 8-55
CN-2062 8-95
CP-339 8-18
CPU-284 8-20
DA-137 8-29
DC-102 8-39
FP-116 8-41
HP-94 8-131
IF-735 8-42
LC-38 8-54
LED-332 8-57
MB-836 8-58
MIX-39 8-62
MT-133/133A 8-91
MT-134 8-92
SW-2 8-93
SW-996 8-94
TB-15 8-95
VR-252 8-96
8-2. DMBK-R101 (ADC-39 board) 8-104
ADC-39 8-104
8-3. DMBK-R102 (DAC-36 board) 8-107
DAC-36 8-107

8-4. DMBK-R103 (DIO-51 board) 8-110
DIO-51 8-110
8-5. DMBK-R104 (DI-35 board) 8-114
DI-35 8-114
8-6. DMBK-R105 (ADA-56 board) 8-119
ADA-56 8-119
8-7. DMBK-R106 (IF-736 board) 8-124
IF-736 8-124
8-8. DMBK-R107 (IF-737 board) 8-126
IF-737 8-126
8-9. Frame Wiring 8-130
Frame Wiring 8-130

Manual Structure

Purpose of this manual

This manual is the service manual volume 2 of the digital audio mixer DMX-R100 series (following models).
DMX-R100, DMBK-R101, DMBK-R102, DMBK-R103, DMBK-R104, DMBK-R105, DMBK-R106, DMBK-R107.
This manual is intended for use by trained system and service engineers, and provides the information of detailed service.

Contents

This service manual volume 2 is organized by following sections.

Section 7 Board Layouts
Describes the board layouts for the unit.

Section 8 Schematic Diagrams
Describes the schematic diagrams and frame wiring for the unit.

Related manuals

In addition to this Service Manual Volume 2, the following manuals are provided. For obtaining, contact your local Sony Sales Office/Service Center.

- **Service Manual Volume 1 (Available on reguest)**
  This manual is provided the information that is premised the detailed service (service overview, electrical alignment, spare parts, semiconductor pin assignments, block diagrams) for DMX-R100 series.
  Part No. :9-976-887-0X

- **DMX-R100 Instruction Manual (Supplied with this unit)**
  Part No. : 3-868-264-1X
- **DMBK-R101/R102/R103/R104/R105/R106/R107 Instruction Manual (Supplied with each unit)**
  Part No. : 3-203-479-0X
  These manuals are required for the proper operation and application of DMX-R100 series system. Part of the instruction manual is included also in the service manual volume 1 , in Section 1. "Operating Instructions".

- **"Semiconductor Pin Assignments" CD-ROM (Available on request)**
  This "Semiconductor Pin Assignments" CD-ROM allows you to search for semiconductors used in Communication System Solutions Network Company equipment.
  Semiconductors that cannot be searched for on this CD-ROM are listed in the service manual for the corresponding unit. The service manual contains a complete list of all semiconductors and their ID Nos., and thus should be used together with the CD-ROM.
  Part number: 9-968-546-XX

Section 7
Board Layouts

Index

		Page
A.	AA-99	7-2
	AA-101	7-4
	AC-199/199A/199B	7-5
	AD-158	7-6
	ADA-56 (DMBK-R105)	7-50
	ADC-39 (DMBK-R101)	7-42
	ASW-57	7-5
C.	CN-1771	7-10
	CN-1772	7-12
	CN-1788	7-13
	CN-1789	7-14
	CN-1941	7-15
	CN-2062	7-15
	CP-339	7-16
	CPU-284	7-18
D.	DA-137	7-20
	DAC-36 (DMBK-R102)	7-46
	DC-102	7-24
	DI-35 (DMBK-R104)	7-49
	DIO-51 (DMBK-R103)	7-48
F.	FP-116	7-26
H.	HP-94	7-15
I.	IF-735	7-28
	IF-736 (DMBK-R106)	7-52
	IF-737 (DMBK-R107)	7-53
L.	LC-38	7-30
	LED-332	7-31
M.	MB-836	7-37
	MIX-39	7-32
	MT-133/133A	7-34
	MT-134	7-36
S.	SW-2	7-38
	SW-996	7-39
T.	TB-15	7-15
V.	VR-252	7-40

SONY-SP1439 / DRUCK 1

7-1. DMX-R100

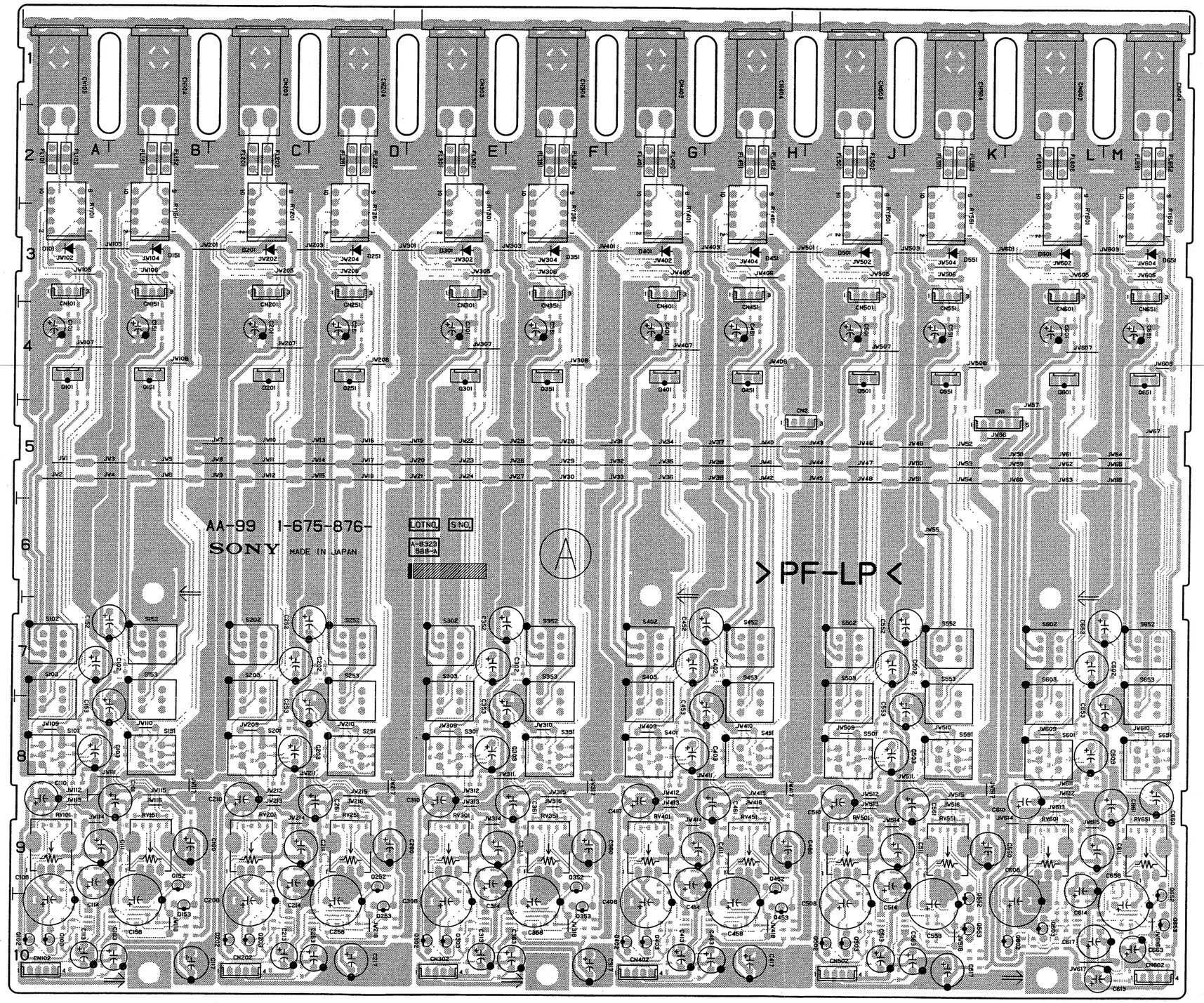

AA-99 (1-675-876-12,13)

CN2	H5	Q653	M10
CN101	A4		
CN102	A10	RV101	A9
CN103	A 1	RV151	B9
CN104	B1	RV201	C9
CN151	B4	RV251	D9
CN201	C4	RV301	E9
CN202	C10	RV351	F9
CN203	C1	RV401	G9
CN204	D1	RV451	H9
CN251	D4	RV501	J9
CN301	E4	RV551	K9
CN302	E10	RV601	L9
CN303	E1	RV651	M9
CN304	F1		
CN351	F4	RY101	A3
CN401	G4	RY151	B3
CN402	G10	RY201	C3
CN403	G1	RY251	D3
CN404	H1	RY301	E3
CN451	H4	RY351	F3
CN501	J4	RY401	G3
CN502	J10	RY451	H3
CN503	J1	RY501	J3
CN504	K1	RY551	K3
CN551	K4	RY601	L3
CN601	L4	RY651	M3
CN602	M10		
CN603	L1	S101	A8
CN604	M1	S102	A7
CN651	M4	S103	A7
		S151	B8
D101	A3	S152	B7
D151	B3	S153	B7
D201	C3	S201	C8
D251	D3	S202	C7
D301	E3	S203	C7
D351	F3	S251	D8
D401	G3	S252	D7
D451	H3	S253	D7
D501	J3	S301	E8
D551	K3	S302	E7
D601	L3	S303	E7
D651	M3	S351	F8
		S352	F7
IC101	*B10	S353	F7
IC201	*D10	S401	G8
IC301	*F10	S402	G7
IC401	*H10	S403	G7
IC501	*K10	S451	H8
IC601	*M10	S452	H7
		S453	H7
Q101	A4	S501	J8
Q102	A10	S502	J7
Q103	A10	S503	J7
Q151	B4	S551	K8
Q152	B9	S552	K7
Q153	B10	S553	K7
Q201	C4	S601	L8
Q202	C10	S602	L7
Q203	C10	S603	L7
Q251	D4	S651	M8
Q252	D9	S652	M7
Q253	D10	S653	M7
Q301	E4		
Q302	E10	*:B SIDE	
Q303	E10		
Q351	F4		
Q352	F9		
Q353	F10		
Q401	G4		
Q402	G10		
Q403	G10		
Q451	H4		
Q452	H9		
Q453	H10		
Q501	J4		
Q502	J10		
Q503	J10		
Q551	K4		
Q552	K9		
Q553	K10		
Q601	L4		
Q602	L10		
Q603	L10		
Q651	M4		
Q652	M9		

AA-99 -A SIDE-
SUFFIX: -12, 13

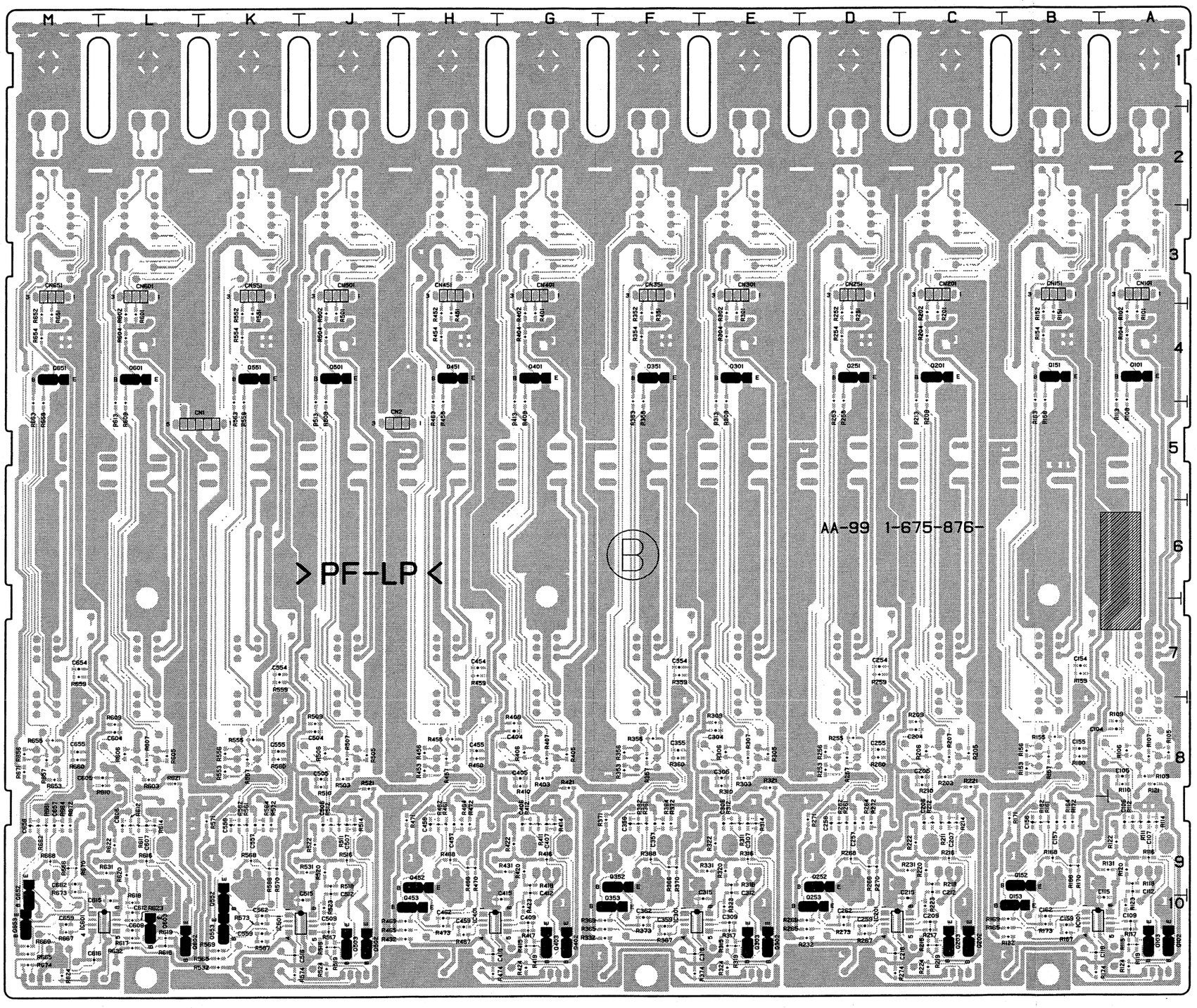

AA-99 -B SIDE-
SUFFIX: -12, 13

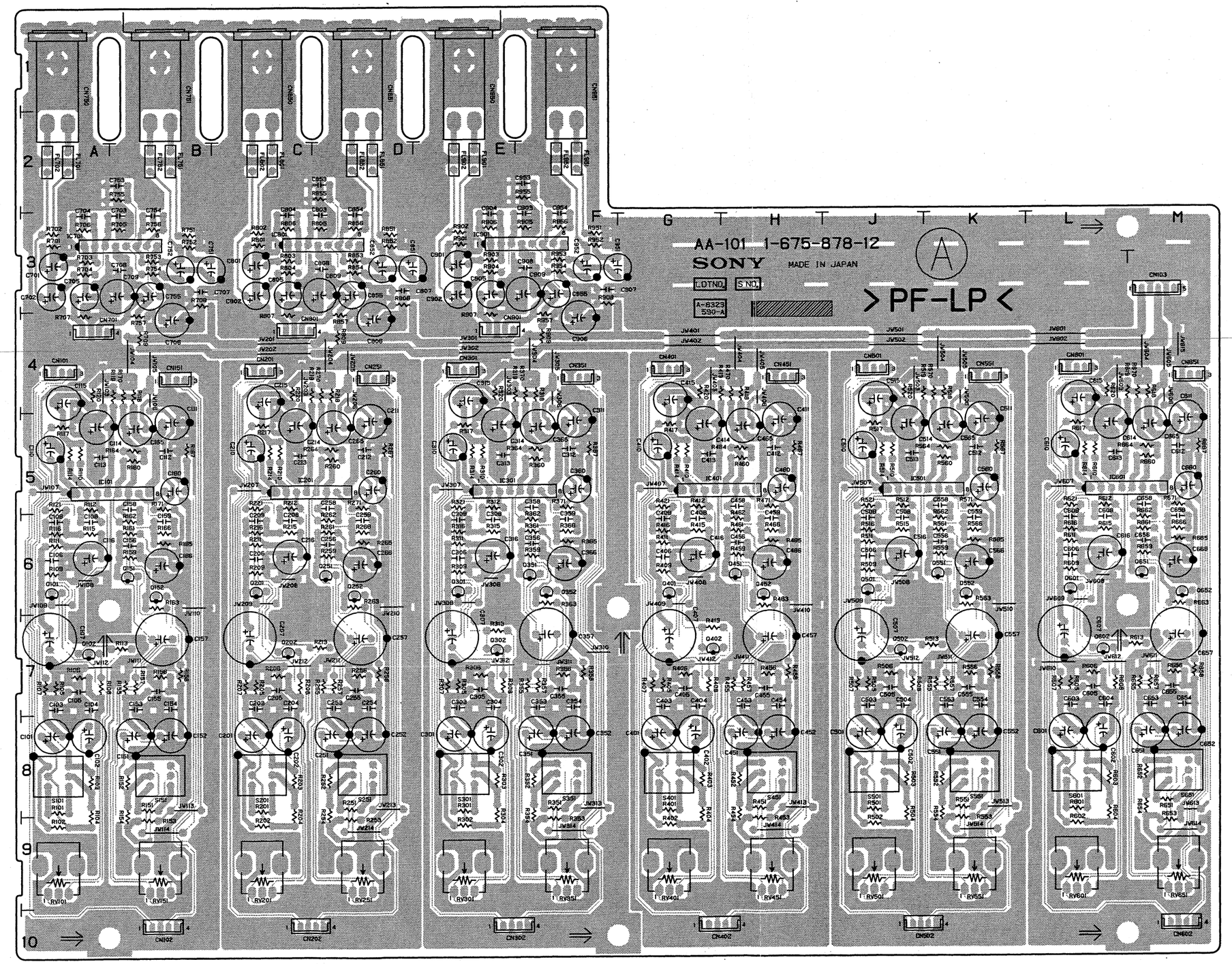

AA-101 (1-675-878-12)

CN102	B10
CN202	C10
CN302	E10
CN402	G10
CN502	J10
CN602	M10
CN701	A3
CN801	C4
CN901	E4
IC101	A5
IC201	C5
IC301	E5
IC401	G5
IC501	J5
IC601	L5
IC701	A3
IC801	C3
IC901	E3
Q101	A6
Q102	A7
Q151	B6
Q152	B6
Q201	C6
Q202	C7
Q251	D6
Q252	D6
Q301	E6
Q302	E7
Q351	F6
Q352	F6
Q401	G6
Q402	G7
Q451	H6
Q452	H6
Q501	J6
Q502	J7
Q551	K6
Q552	K6
Q601	L6
Q602	L7
Q651	M6
Q652	M6
RV101	A9
RV151	B9
RV201	C9
RV251	D9
RV301	E9
RV351	F9
RV401	G9
RV451	H9
RV501	J9
RV551	K9
RV601	L9
RV651	M9
S101	A8
S151	B8
S201	C8
S251	D8
S301	E8
S351	F8
S401	G8
S451	H8
S501	J8
S551	K8
S601	L8
S651	M8

AA-101 -A SIDE-
SUFFIX: -12

DMX-R100/V2

AC-199/199A/199B, ASW-57

AC-199 (1-675-887-12)	
A2	B3
A3	C3
C1	C2
C2	D2
C3	B3
C4	C2
C5	C3
CN1	A3
CN2	D3
CN3	E4
D1	E2
D2	E2
JW1	E3
JW2	E3
JW5	D3
L1	B2
R1	C4
R2	B4
R3	B4
R4	D4
R5	E1
R6	D1
R7	B1
RY1	D3

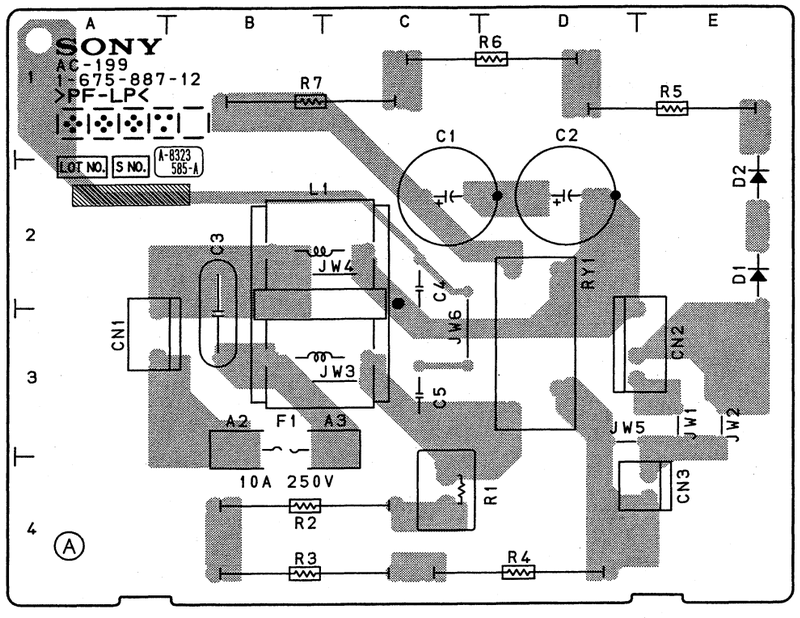

AC-199/199A/199B -A SIDE-
SUFFIX: -12

AC-199 (1-675-887-13)	
A2	B3
A3	C3
C1	C2
C2	D2
C3	B3
C4	C2
C5	C3
CN1	A3
CN2	D3
CN3	E4
D1	E2
D2	E2
JW1	E3
JW2	E3
JW5	D3
L1	B2
R1	C4
R2	B4
R3	B4
R4	D4
R5	E1
R6	D1
R7	B1
RY1	D3

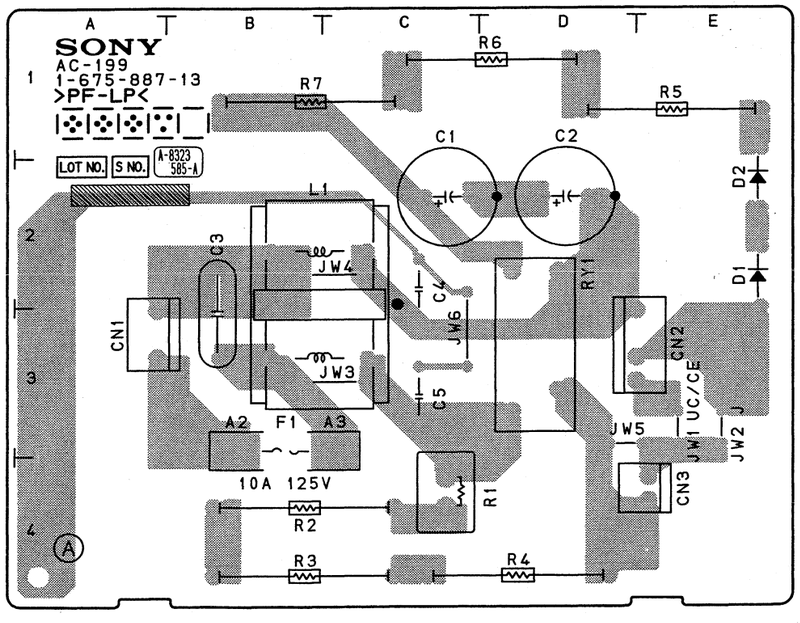

AC-199/199A/199B -A SIDE-
SUFFIX: -13

ASW-57 (1-675-870-12)	
CN1	A2
D6	C1
D7	D1
D14	B1
D15	C2
D16	D2
D106	C1
D107	D1
D108	D1
D114	B2
D115	C2
D116	D2
D119	D1
S6	C1
S7	D1
S8	D1
S14	B1
S15	C2
S16	D2

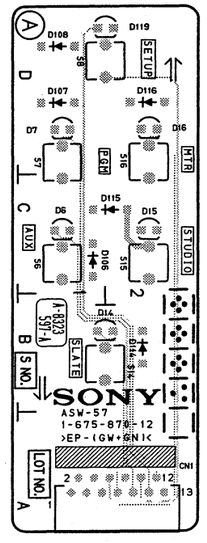

ASW-57 -A SIDE-
SUFFIX: -12

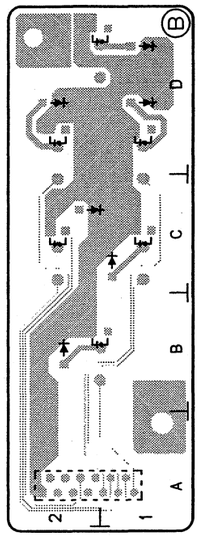

ASW-57 -B SIDE-
SUFFIX: -12

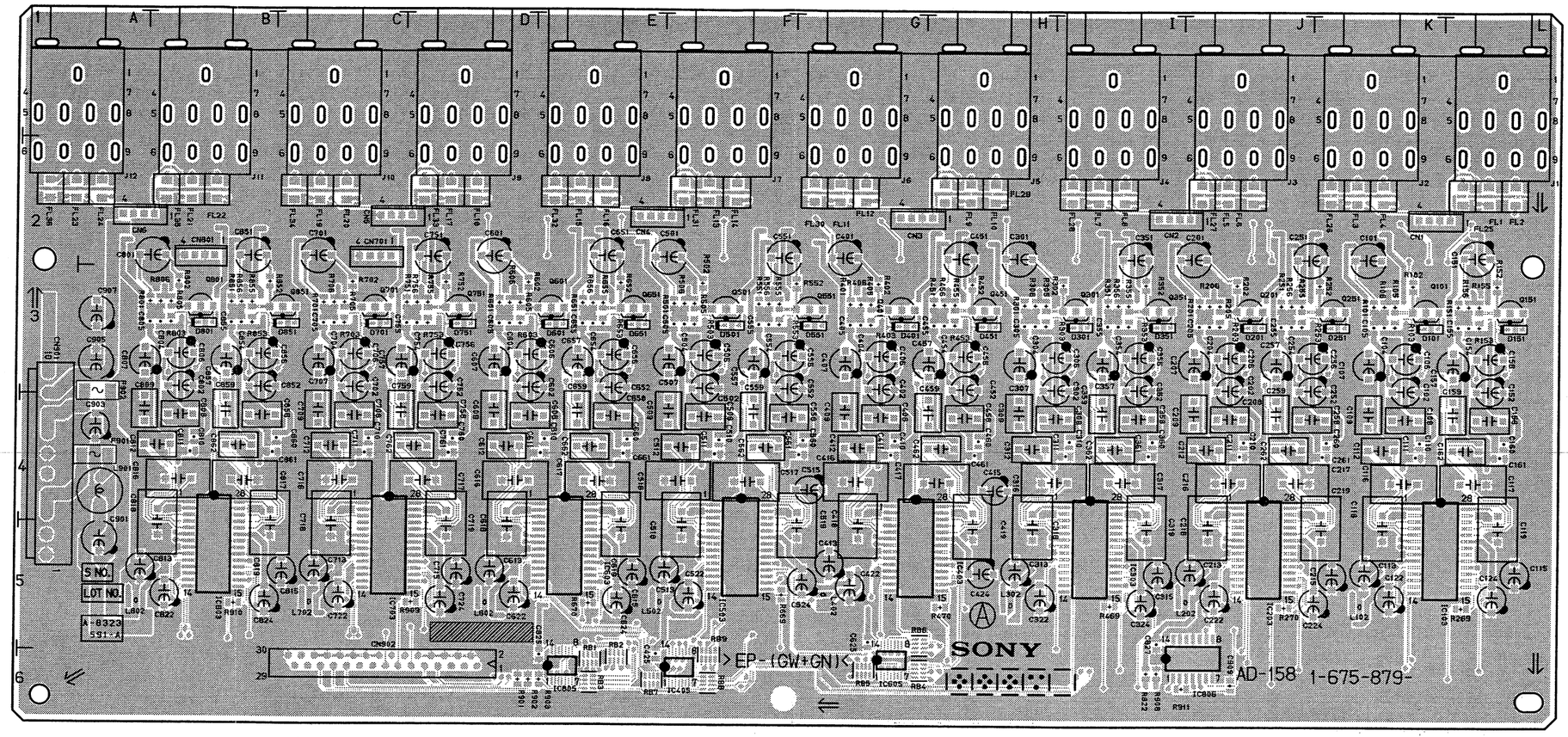

AD-158 -A SIDE-
SUFFIX: -13, 14

AD-158 (1-675-879-13,14)

CN1	K2	F901	A4	IC551	*F3	Q401	G3
CN2	I2	F902	A3	IC552	*G4	Q451	H3
CN3	G2			IC601	*D3	Q501	F3
CN4	E2	IC101	*K3	IC602	*E4	Q551	G3
CN5	C2	IC102	*K4	IC603	E5	Q601	E3
CN6	A2	IC103	K5	IC605	G6	Q651	E3
CN701	C2	IC151	*L3	IC651	*E3	Q701	C3
CN801	B2	IC152	*L4	IC652	*E4	Q751	D3
CN901	A4	IC201	*J3	IC701	*C3	Q801	B3
CN902	C6	IC202	*J4	IC702	*C4	Q851	C3
		IC203	J5	IC703	C5		
D101	K3	IC251	*J3	IC751	*D3	*:B SIDE	
D151	L3	IC252	*K4	IC752	*D4		
D201	J3	IC301	*H3	IC801	*B3		
D251	K3	IC302	*I4	IC802	*B4		
D301	I3	IC303	I5	IC803	B5		
D351	I3	IC351	*I3	IC805	E6		
D401	G3	IC352	*I4	IC806	J6		
D451	H3	IC401	*G3	IC851	*B3		
D501	F3	IC402	*G4	IC852	*C4		
D551	G3	IC403	G5				
D601	E3	IC405	F6	Q101	K3		
D651	E3	IC451	*H3	Q151	L3		
D701	C3	IC452	*H4	Q201	J3		
D751	D3	IC501	*F3	Q251	K3		
D801	B3	IC502	*F4	Q301	I3		
D851	C3	IC503	F5	Q351	I3		

SONY-SP1439 / DRUCK 6

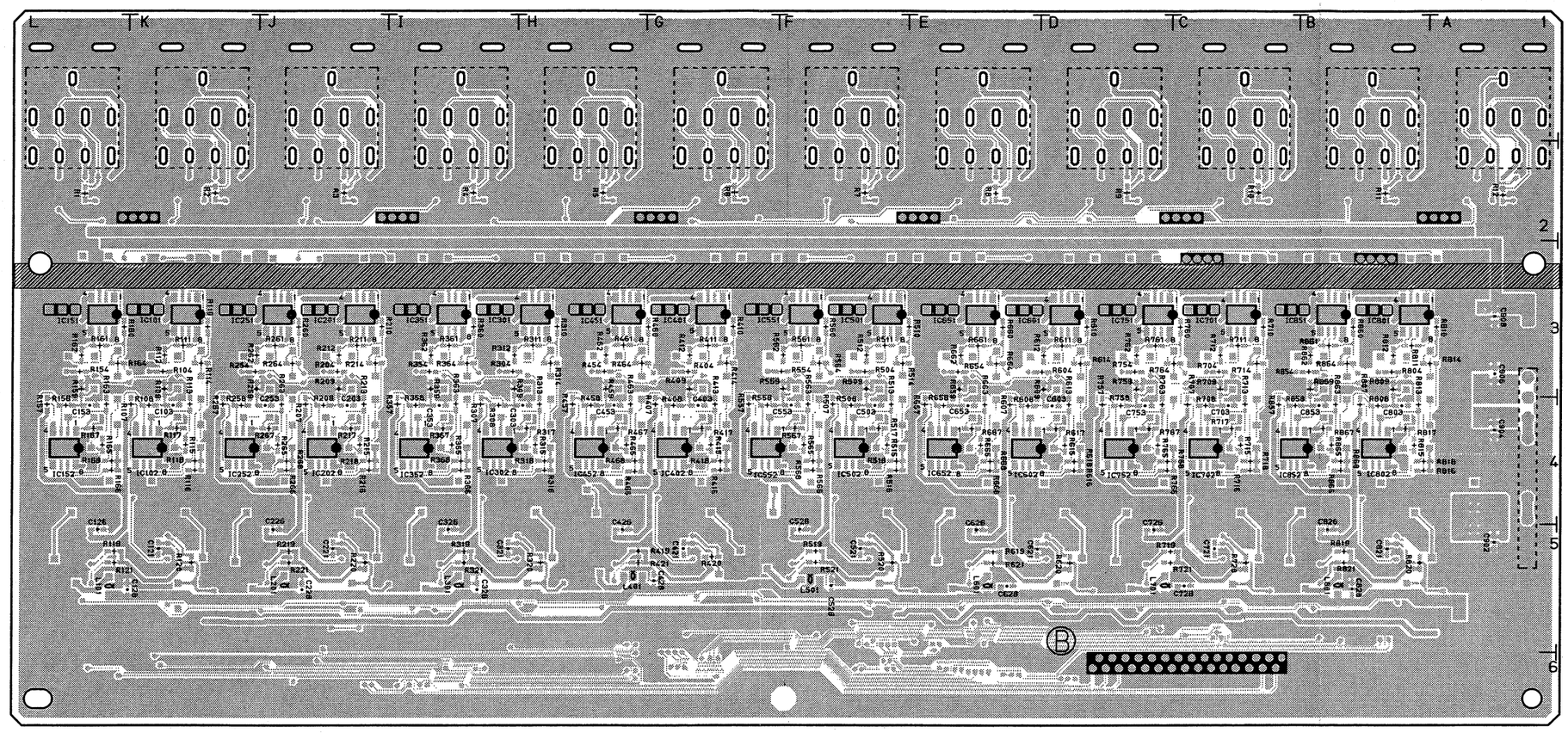

AD-158 -B SIDE-
SUFFIX: -13, 14

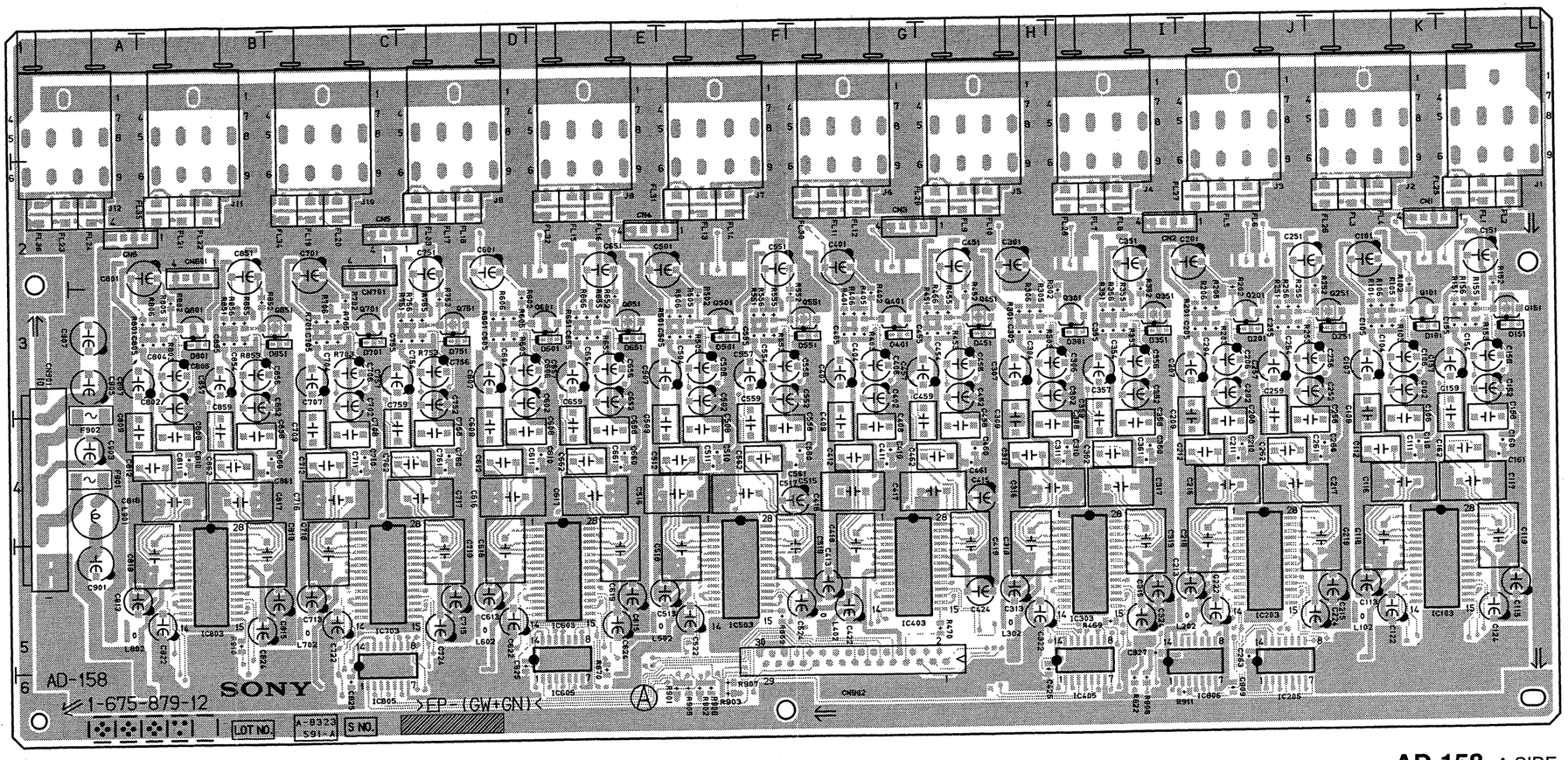

AD-158 -A SIDE-
SUFFIX: -12

AD-158 (1-675-879-12)

CN1	K2	F901	A4	IC503	F5	Q351	I3
CN2	I2	F902	A3	IC551	*F3	Q401	G3
CN3	G2			IC552	*G4	Q451	H3
CN4	E2	IC101	*K3	IC601	*D3	Q501	F3
CN5	C2	IC102	*K4	IC602	*E4	Q551	G3
CN6	A2	IC103	K5	IC603	E5	Q601	E3
CN701	C2	IC151	*L3	IC605	E5	Q651	E3
CN801	B2	IC152	*L4	IC651	*E3	Q701	C3
CN901	A4	IC201	*J3	IC652	*E4	Q751	D3
CN902	G5	IC202	*J4	IC701	*C3	Q801	B3
		IC203	J5	IC702	*C4	Q851	C3
D101	K3	IC205	J6	IC703	C5		
D151	L3	IC251	*J3	IC751	*D3	*:B SIDE	
D201	J3	IC252	*K4	IC752	*D4		
D251	K3	IC301	*H3	IC801	*B3		
D301	I3	IC302	*I4	IC802	*B4		
D351	I3	IC303	I5	IC803	B5		
D401	G3	IC351	*I3	IC805	C5		
D451	H3	IC352	*I4	IC806	J6		
D501	F3	IC401	*G3	IC851	*B3		
D551	G3	IC402	*G4	IC852	*C4		
D601	E3	IC403	G5				
D651	E3	IC405	I6	Q101	K3		
D701	C3	IC451	*H3	Q151	L3		
D751	D3	IC452	*H4	Q201	J3		
D801	B3	IC501	*F3	Q251	K3		
D851	C3	IC502	*F4	Q301	I3		

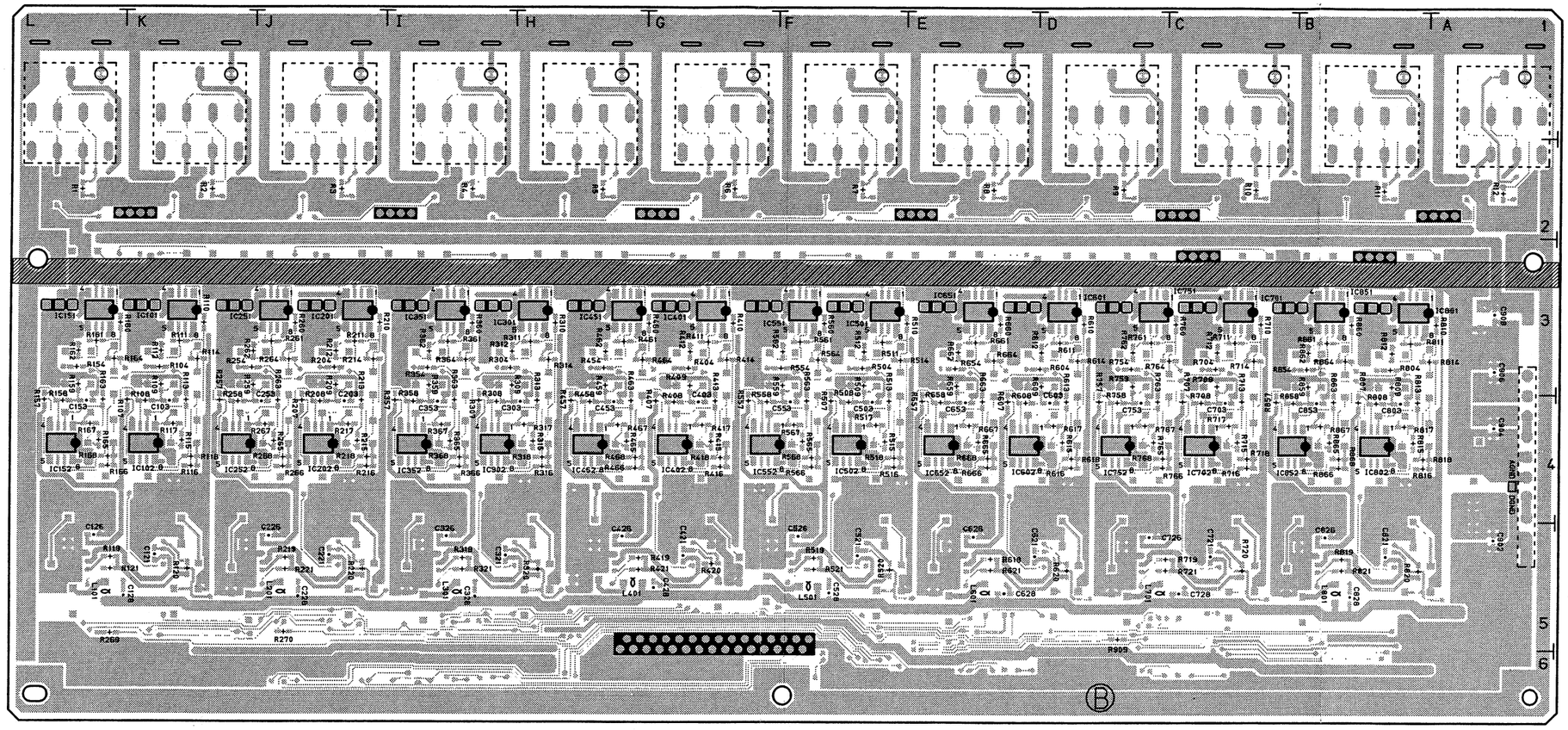

AD-158 -B SIDE-
SUFFIX: -12

CN-1771 (1-675-885-13)

CN101	K2
CN201	I2
CN310	G2
CN320	F2
CN330	B2
CN411	E2
CN421	D2
CN431	A2
CN501	B1
CN901	J1
D101	*L1
D201	*J2
D202	*J2
D310	*G1
D311	*H1
D320	*F1
D321	*G1
D330	*B1
D331	*B1
D901	*K2
D902	*K2
IC101	K1
IC202	*H2
IC203	I1
IC301	*E1
IC401	*C2
IC502	*C1
IC901	K2
Q101	L2
S201	J2

*:B SIDE

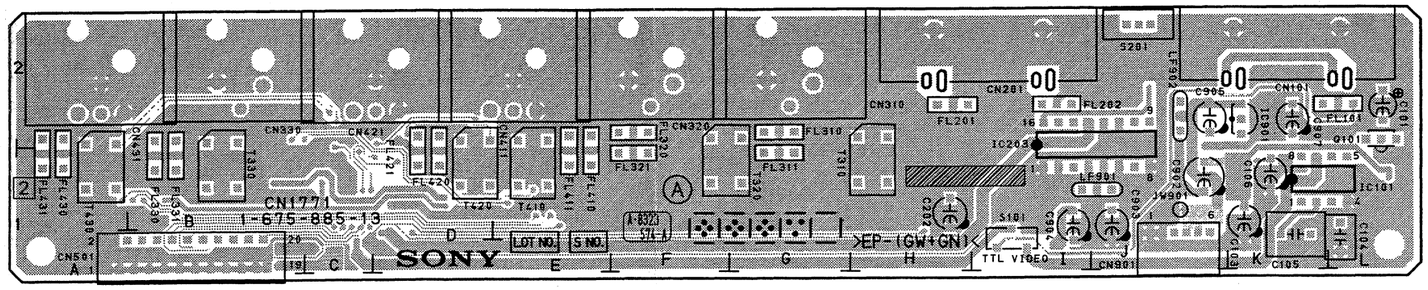

CN-1771 -A SIDE-
SUFFIX: -13

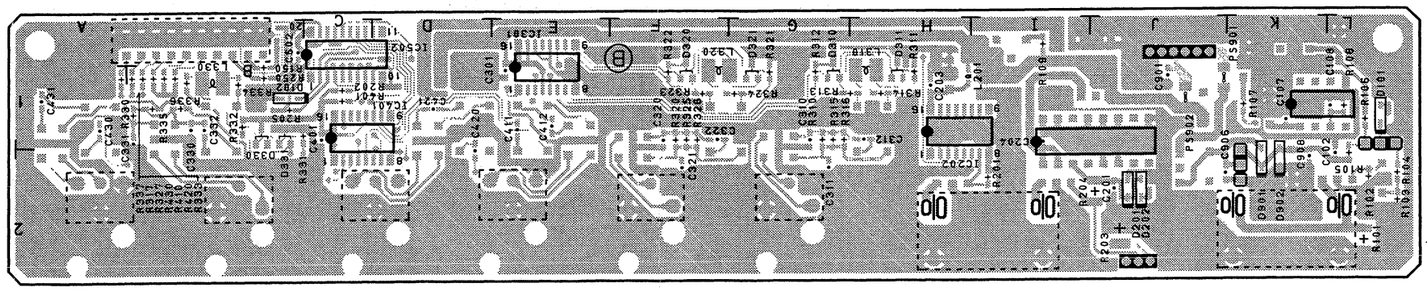

CN-1771 -B SIDE-
SUFFIX: -13

CN-1771 (1-675-885-12)

CN101	K2
CN201	I2
CN310	G2
CN320	F2
CN330	B2
CN411	E2
CN421	D2
CN431	A2
CN501	B1
CN901	J1
D101	*L1
D201	*J2
D202	*J2
D310	*G1
D311	*H1
D320	*F1
D321	*G1
D330	*B1
D331	*B1
D901	*K2
D902	*K2
IC101	K1
IC202	*H2
IC203	I1
IC301	*E1
IC401	*C2
IC502	*C1
IC901	K2
Q101	L2
S201	J2

*:B SIDE

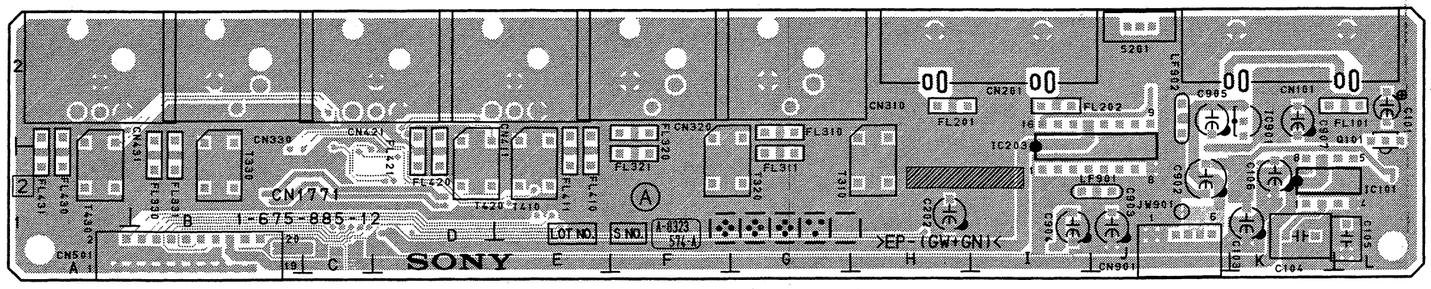

CN-1771 -A SIDE-
SUFFIX: -12

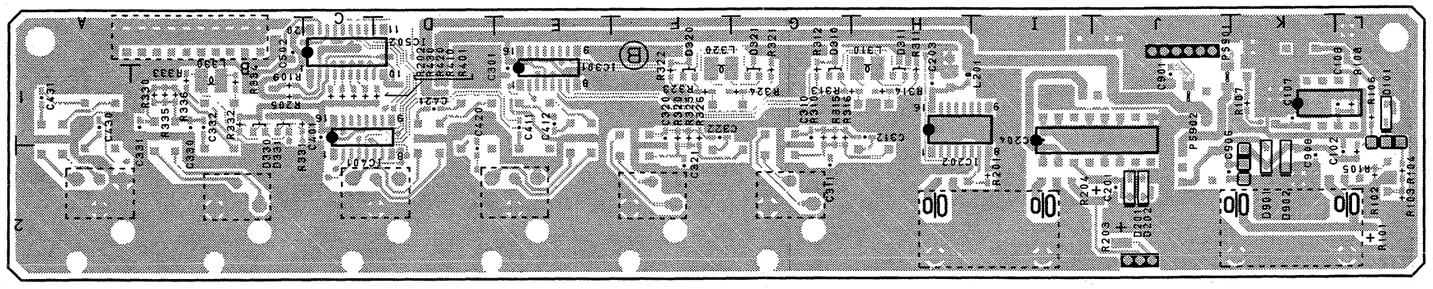

CN-1771 -B SIDE-
SUFFIX: -12

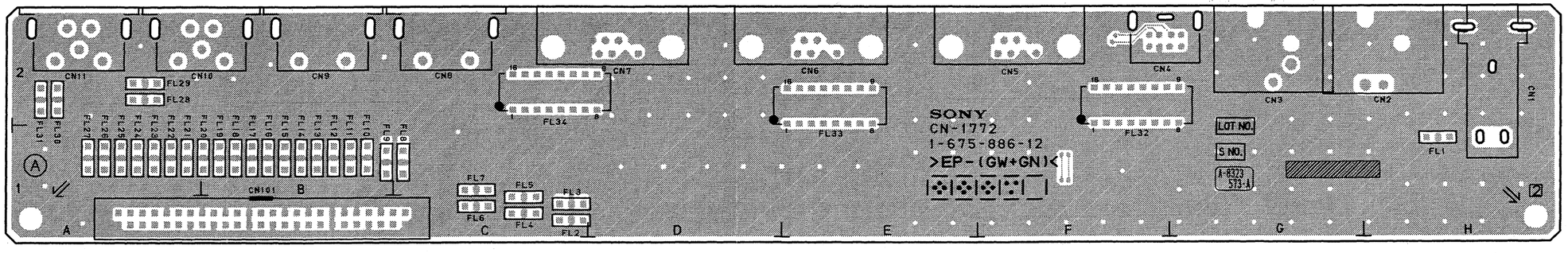

CN-1772 -A SIDE-
SUFFIX: -12

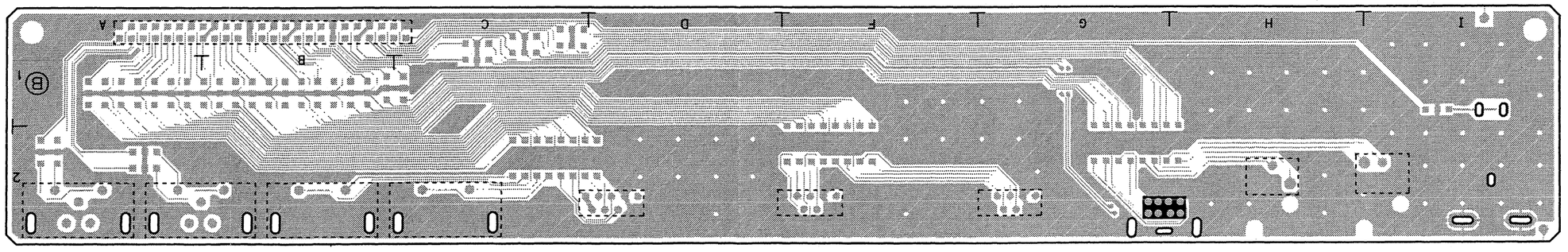

CN-1772 -B SIDE-
SUFFIX: -12

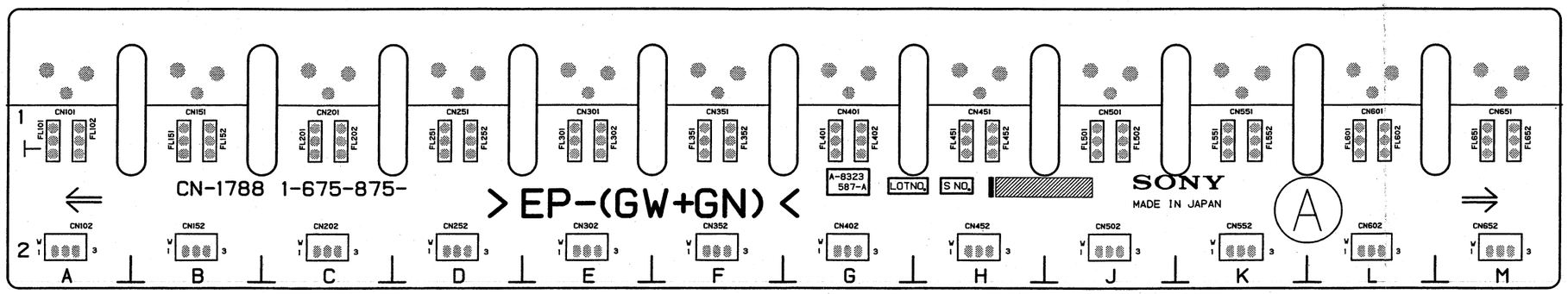

CN-1788 -A SIDE-
SUFFIX: -12, 13

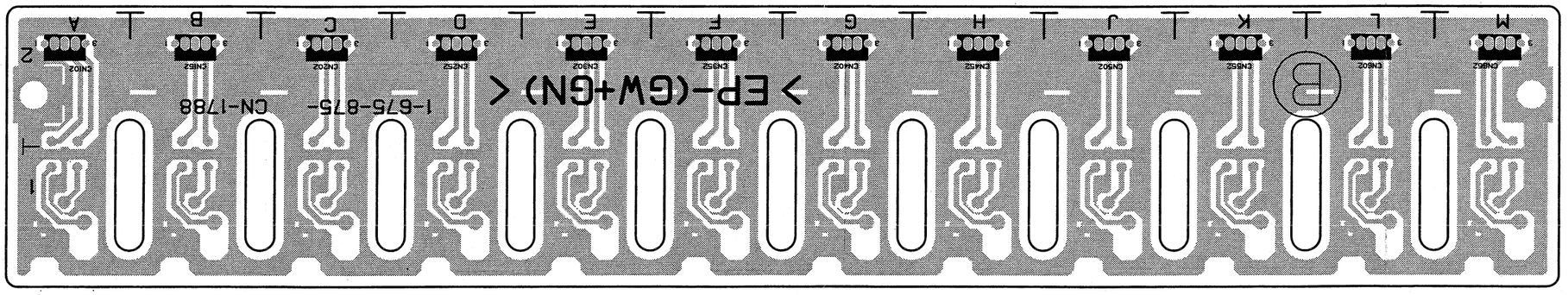

CN-1788 -B SIDE-
SUFFIX: -12, 13

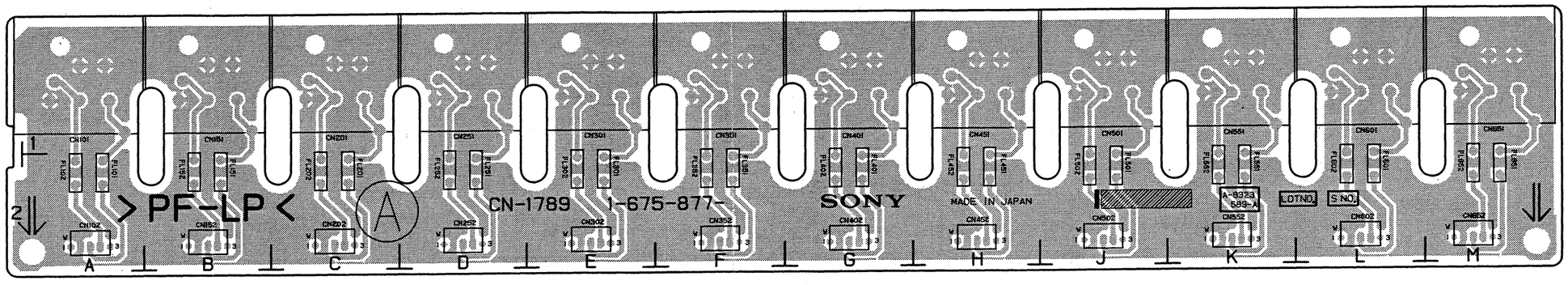

CN-1789 -A SIDE-
SUFFIX: -12, 13

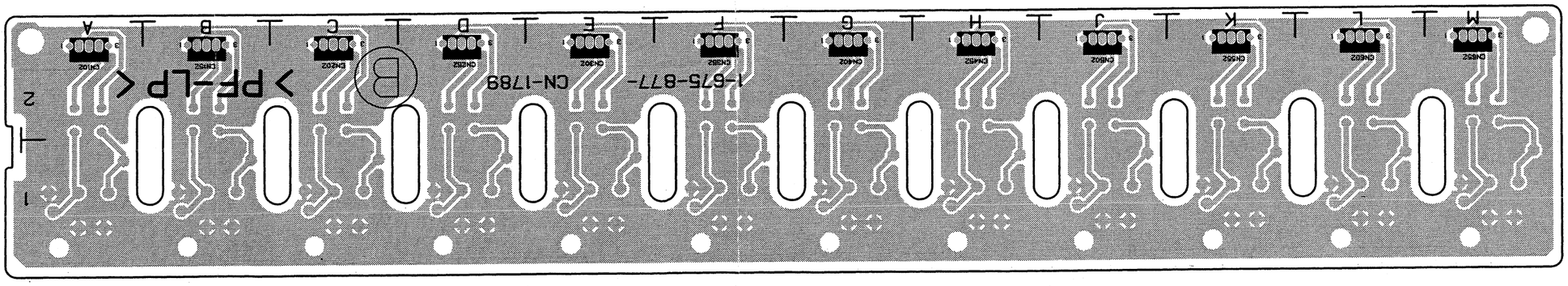

CN-1789 -B SIDE-
SUFFIX: -12, 13

CN-1941, CN-2062, TB-15, HP-94

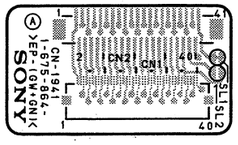

CN-1941 -A SIDE-
SUFFIX: -11, 12

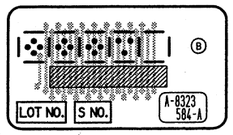

CN-1941 -B SIDE-
SUFFIX: -11, 12

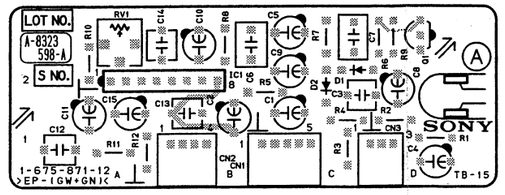

TB-15 -A SIDE-
SUFFIX: -12

TB-15 (1-675-871-12)

CN1	C1
CN2	B1
CN3	D1
D1	C2
D2	C2
IC1	A2
Q1	D2
RV1	A2

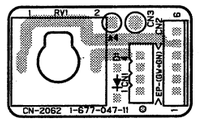

CN-2062 -A SIDE-
SUFFIX: -11

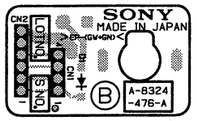

CN-2062 -B SIDE-
SUFFIX: -11

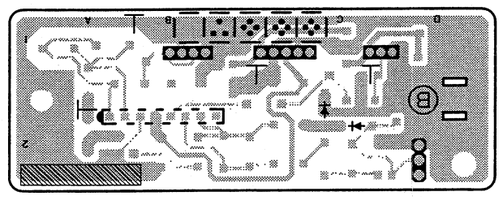

TB-15 -B SIDE-
SUFFIX: -12

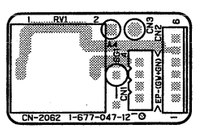

CN-2062 -A SIDE-
SUFFIX: -12

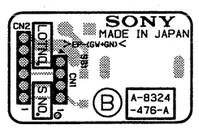

CN-2062 -B SIDE-
SUFFIX: -12

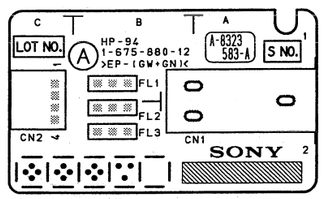

HP-94 -A SIDE-
SUFFIX: -12

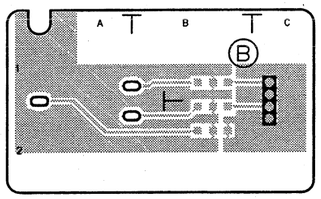

HP-94 -B SIDE-
SUFFIX: -12

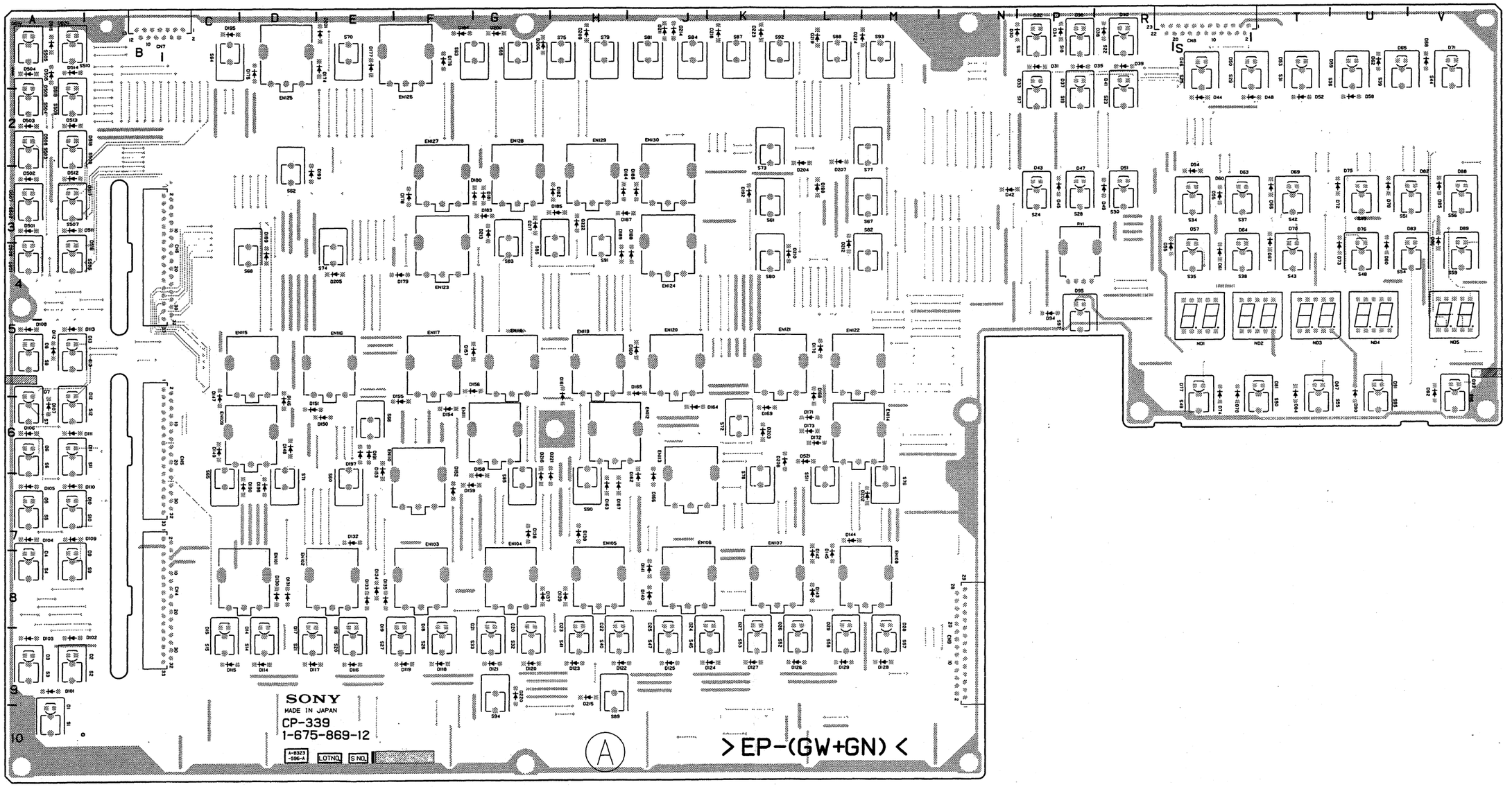

CP-339 -A SIDE-

SUFFIX: -12

CP-339 (1-675-869-12)

CN4	C8	D6	A6	D18	F9	D30	P1	D42	N3	D54	S3	D66	T3	D78	S6	D90	U6	D107	A6	D119	F9	D131	D8	D143	L8	D155	F6	D167	H7	D179	F4	D191	E6	D203	K6
CN5	C6	D7	A5	D19	F9	D31	P1	D43	P3	D55	R4	D67	T4	D79	U3	D91	U5	D108	A5	D120	G9	D132	E7	D144	L7	D156	F5	D168	L6	D180	G3	D192	K3	D204	L3
CN6	C4	D8	A5	D20	G9	D32	P1	D44	S2	D56	S3	D68	V1	D80	U4	D92	V6	D109	A7	D121	G9	D133	E8	D145	L8	D157	G5	D169	K6	D181	G3	D193	D3	D205	E4
CN7	B1	D9	A8	D21	G9	D33	P1	D45	P3	D57	S4	D69	T3	D81	T5	D93	V5	D110	A7	D122	H9	D134	E8	D146	D6	D158	G7	D170	L5	D182	H3	D194	F1	D206	G1
CN8	S1	D10	A7	D22	H9	D34	P1	D46	S1	D58	U2	D70	T4	D82	V3	D94	P4	D111	A6	D123	H9	D135	E8	D147	C6	D159	F7	D171	L6	D183	G3	D195	C1	D207	L2
CN9	N9	D11	A6	D23	H9	D35	P1	D47	P3	D59	U1	D71	V1	D83	V4	D95	P4	D112	A5	D124	K9	D136	G7	D148	D6	D160	J5	D172	L6	D184	H3	D196	D7	D208	L6
		D12	A5	D24	K9	D36	P1	D48	T2	D60	S3	D72	U3	D84	T6	D101	A9	D113	A5	D125	J9	D137	G8	D149	C6	D161	H6	D173	L6	D185	H3	D197	E6	D209	H1
D1	A10	D13	A5	D25	J9	D37	P1	D49	R3	D61	S4	D73	U4	D85	V3	D102	A9	D114	D9	D126	L9	D138	H7	D150	E6	D162	J7	D174	E1	D186	J3	D198	L3	D210	L4
D2	A9	D14	D9	D26	L9	D38	R1	D50	T1	D62	U1	D74	S6	D86	V4	D103	A9	D115	C9	D127	K9	D139	H8	D151	D6	D163	H7	D175	D1	D187	H3	D199	D4	D211	J1
D3	A9	D15	C9	D27	K9	D39	R1	D51	R3	D63	S3	D75	U3	D87	T5	D104	A7	D116	E9	D128	M9	D140	J8	D152	F7	D164	J6	D176	F1	D188	J4	D200	G1	D212	L4
D4	A8	D16	E9	D28	M9	D40	R1	D52	T2	D64	S4	D76	U4	D88	V3	D105	A7	D117	D9	D129	L9	D141	J8	D153	E6	D165	J5	D177	E1	D189	H4	D201	E1	D213	G3
D5	A7	D17	D9	D29	L9	D41	R1	D53	T1	D65	U1	D77	S5	D89	V4	D106	A6	D118	F9	D130	D8	D142	L8	D154	F6	D166	J7	D178	F3	D190	D7	D202	M7	D214	J1

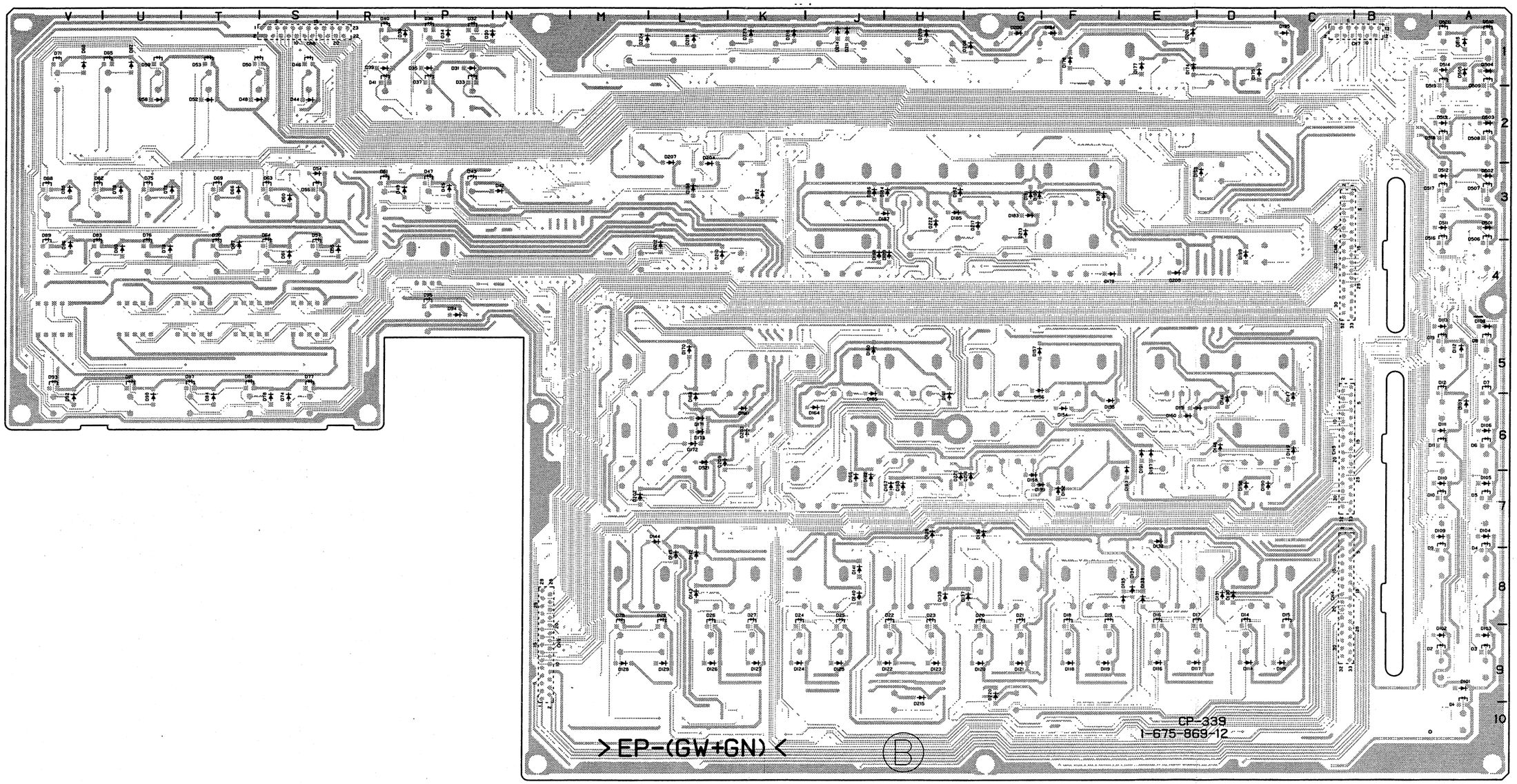

CP-339 -B SIDE-
SUFFIX: -12

D215	H9	D503	A2	D515	A1	EN105	H8	EN117	F5	EN129	H3	S2	A9	S14	D9	S26	F9	S38	S4	S50	T6	S62	D3	S74	E4	S86	H4	S501	A4
D216	G7	D504	A1	D516	A4	EN106	J8	EN118	G5	EN130	J3	S3	A9	S15	C9	S27	F9	S39	U1	S51	V3	S63	G1	S75	H1	S87	K1	S502	A3
D217	G3	D505	A1	D517	A3	EN107	K8	EN119	H5			S4	A8	S16	P1	S28	P3	S40	H9	S52	L9	S64	C1	S76	M7	S88	L1	S503	A2
D218	K1	D506	A4	D518	A2	EN108	M8	EN120	J5	ND1	S5	S5	A7	S17	P2	S29	T1	S41	H9	S53	K9	S65	C7	S77	M2	S89	H9	S504	A2
D219	L1	D507	A3	D519	A1	EN109	D6	EN121	K5	ND2	T5	S6	A6	S18	P1	S30	R3	S42	T3	S54	V4	S66	E6	S78	K7	S90	H7	S505	A1
D220	G9	D508	A2	D520	A1	EN110	F7	EN122	L5	ND3	T5	S7	A6	S19	P2	S31	T1	S43	T4	S55	T6	S67	M3	S79	H1	S91	H4	S506	A4
D221	H7	D509	A1	D521	L6	EN111	G6	EN123	F4	ND4	U5	S8	A5	S20	E9	S32	G9	S44	V1	S56	V3	S68	D4	S80	K4	S92	K1	S507	A3
D222	H3	D510	A1			EN112	H6	EN124	J4	ND5	V5	S9	A8	S21	D9	S33	G9	S45	U3	S57	M9	S69	G1	S81	J1	S93	M1	S508	A2
D223	K1	D511	A3	EN101	D8	EN113	J7	EN125	D1			S10	A7	S22	R1	S34	S3	S46	K9	S58	L9	S70	E1	S82	M4	S94	G9	S509	A2
D224	M1	D512	A3	EN102	E8	EN114	L6	EN126	F1	RV1	P4	S11	A6	S23	R2	S35	S4	S47	J9	S59	V4	S71	D7	S83	G4	S95	U6	S510	A1
D501	A3	D513	A2	EN103	F8	EN115	D5	EN127	F3			S12	A6	S24	P3	S36	U1	S48	U4	S60	E7	S72	K6	S84	J1	S96	V6	S511	L7
D502	A3	D514	A1	EN104	G8	EN116	E5	EN128	G3	S1	A10	S13	A5	S25	S1	S37	S3	S49	S6	S61	K3	S73	K2	S85	G7	S97	P5		

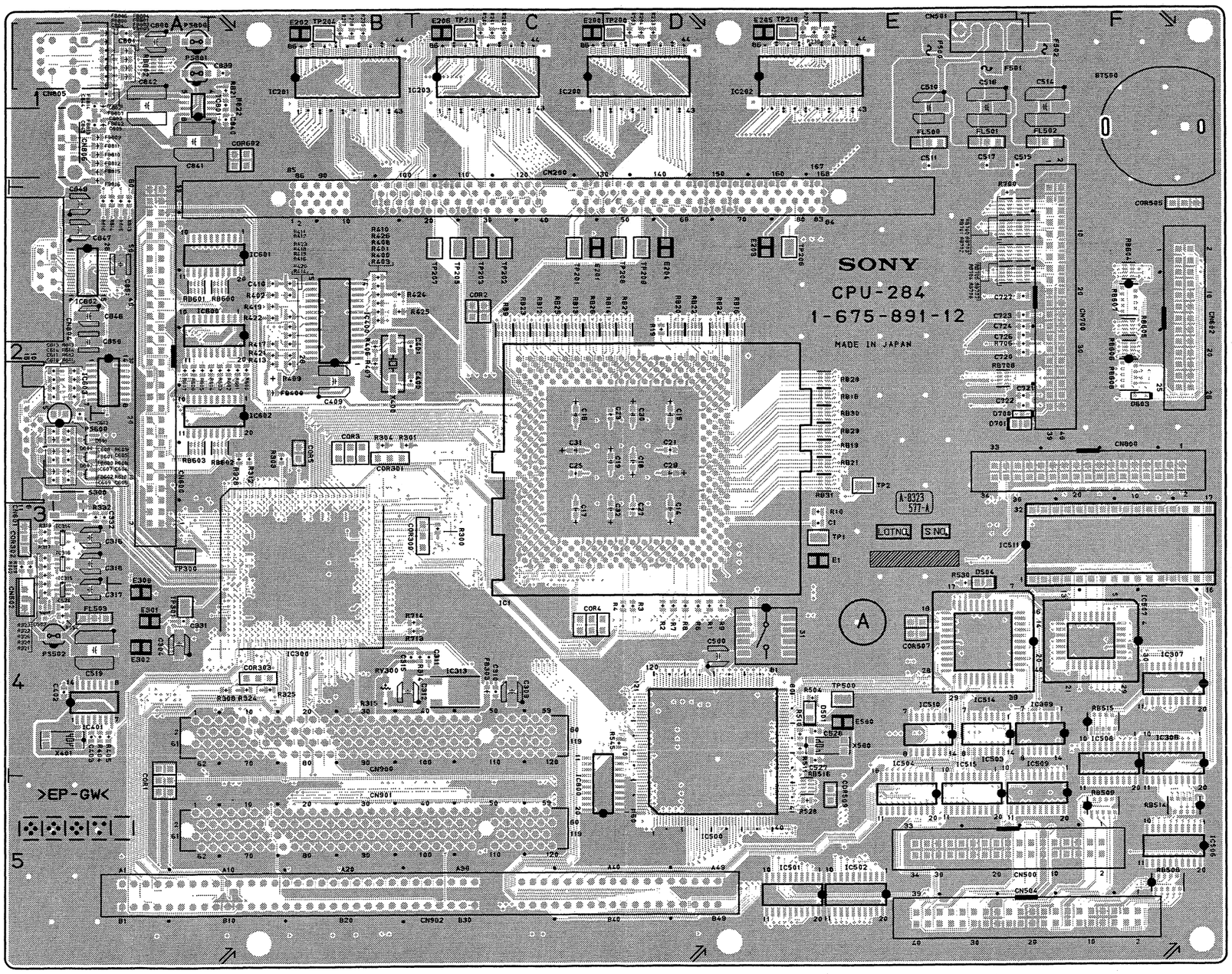

CPU-284 -A SIDE-
SUFFIX: -12

CPU-284 (1-675-891-12)

CN200	C2	IC1	D3
CN500	E5	IC200	C1
CN501	E1	IC201	B1
CN502	A4	IC202	D1
CN504	E5	IC203	C1
CN600	A2	IC300	B3
CN601	A3	IC306	F4
CN602	F2	IC307	F4
CN700	F2	IC308	*A4
CN800	F3	IC309	F4
CN804	A2	IC313	C4
CN805	A1	IC314	A3
CN806	A1	IC315	A4
CN900	B4	IC316	A3
CN901	B5	IC400	B2
CN902	C5	IC401	A4
		IC500	D4
COR1	A5	IC501	D5
COR2	C2	IC502	E5
COR3	B3	IC503	E4
COR4	C4	IC504	E5
COR5	B3	IC506	F5
COR300	C3	IC507	F4
COR301	B3	IC508	F4
COR302	A3	IC509	F5
COR303	B4	IC510	E4
COR505	F2	IC511	F3
COR507	E4	IC514	E4
COR509	E5	IC515	E5
COR602	B1	IC600	B2
		IC601	B2
D501	D4	IC602	B2
D503	A4	IC603	A2
D504	E4	IC800	D5
D600	A3	IC801	B1
D601	A3	IC802	A2
D602	A3		
D603	F2	RV300	B4
D604	*A2		
D605	*A2	S1	D4
D700	E3	S300	A3
D701	E3		
		TP1	D3
E1	D3	TP2	E3
E200	C1	TP200	D1
E201	C2	TP201	C2
E202	B1	TP202	C2
E203	D2	TP203	C2
E204	D2	TP204	B1
E205	D1	TP205	C2
E206	C1	TP206	D2
E300	A4	TP207	C2
E301	A4	TP208	D2
E302	A4	TP209	D2
E500	E4	TP210	D1
		TP211	C1
F500	E1	TP300	A3
F501	E1	TP301	A4
F502	F1	TP500	E4
FB300	*A4	X400	B2
FB301	*A4	X401	A4
FB302	*B3	X500	E4
FB303	C4		
FB304	*B4	*:B SIDE	
FB400	B2		
FB600	A3		
FB601	A3		
FB602	A3		
FB800	A1		
FB801	A1		
FB802	A1		
FB803	A1		
FB804	A1		
FB805	A1		
FB806	A1		
FB807	A1		
FB808	*A2		
FB809	A1		
FB810	A1		
FB811	A1		
FB812	A1		
FB813	A1		
FB814	A1		
FB815	A1		
FB816	A1		
FL500	E1		
FL501	E1		
FL502	F1		
FL503	A4		

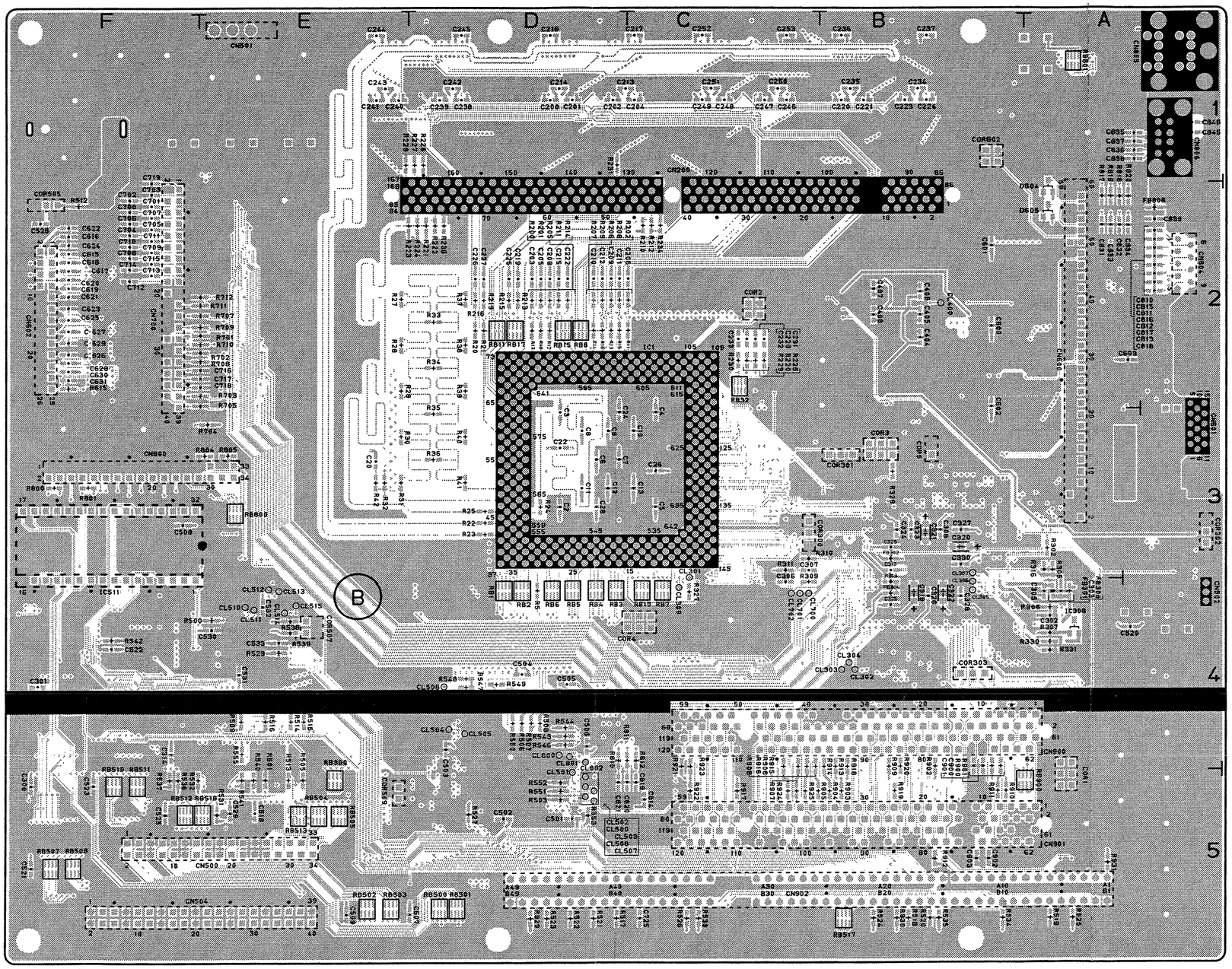

CPU-284 -B SIDE-
SUFFIX: -12

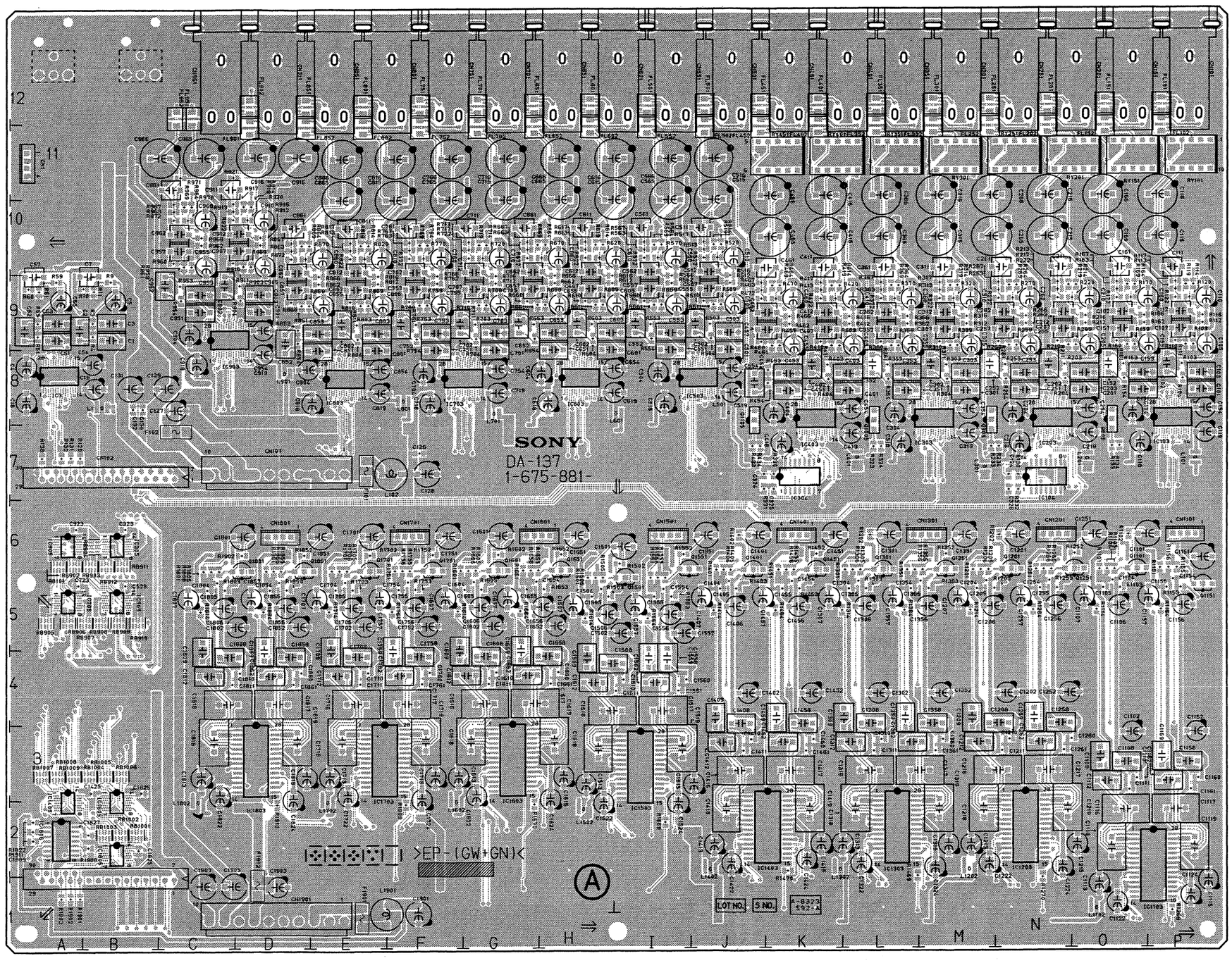

DA-137 (1-675-881-13,14)

CN1	A11	IC502	*J10	RY101	P11
CN101	P12	IC503	J8	RY151	O11
CN102	B7	IC505	B5	RY201	O11
CN103	D7	IC551	*I9	RY251	N11
CN151	O12	IC552	*I10	RY301	M11
CN201	O12	IC601	*H9	RY351	L11
CN251	N12	IC602	*H10	RY401	K11
CN301	M12	IC603	H8	RY451	K11
CN351	L12	IC651	*G9		
CN401	L12	IC652	*G10	*:B SIDE	
CN451	K12	IC701	*G9		
CN501	J12	IC702	*G10		
CN551	I12	IC703	F8		
CN601	I12	IC705	A5		
CN651	H12	IC751	*F9		
CN701	G12	IC752	*F10		
CN751	F12	IC801	*E9		
CN801	F12	IC802	*E10		
CN851	E12	IC803	E8		
CN901	*B12	IC851	*D9		
CN911	D12	IC852	*D10		
CN951	*A12	IC901	*D10		
CN961	C12	IC902	*D10		
CN1101	P6	IC903	C9		
CN1201	N6	IC905	A6		
CN1301	M6	IC951	*C10		
CN1401	K6	IC952	*C10		
CN1501	I6	IC1101	*O5		
CN1601	G6	IC1102	*O3		
CN1701	F6	IC1103	P2		
CN1801	D6	IC1151	*P5		
CN1901	D1	IC1152	*P3		
CN1902	B1	IC1201	*M5		
CN1902	B2	IC1202	*N3		
		IC1203	N2		
D101	*P11	IC1251	*N5		
D151	*P11	IC1252	*N3		
D201	*O11	IC1301	*L5		
D252	*N11	IC1302	*L3		
D301	*M11	IC1303	L2		
D351	*L11	IC1351	*L5		
D401	*L11	IC1352	*M3		
D451	*K11	IC1401	*J5		
D1101	*O5	IC1402	*J3		
D1151	*P5	IC1403	K2		
D1201	*N5	IC1405	A2		
D1251	*O5	IC1451	*K5		
D1301	*L5	IC1452	*K3		
D1351	*M5	IC1501	*H5		
D1401	*J5	IC1502	*I4		
D1451	*K5	IC1503	I3		
D1501	*I5	IC1551	*I5		
D1551	*I5	IC1552	*I4		
D1601	*G5	IC1601	*G5		
D1651	*H5	IC1602	*G4		
D1701	*E5	IC1603	G3		
D1751	*F5	IC1605	B2		
D1801	*D5	IC1651	*G5		
D1851	*D5	IC1652	*H4		
		IC1701	*E5		
F101	E7	IC1702	*E4		
F102	C7	IC1703	E3		
F1901	E1	IC1751	*F5		
F1902	D1	IC1752	*F4		
		IC1801	*C5		
IC1	*B9	IC1802	*D4		
IC3	A8	IC1803	D3		
IC51	*A9	IC1805	B2		
IC101	*P8	IC1806	A2		
IC102	*P9	IC1851	*D5		
IC103	P8	IC1852	*D4		
IC104	N7				
IC151	*O8	Q805	O8		
IC152	*O9	Q905	M8		
IC201	*N8	Q1005	L8		
IC202	*N9	Q1101	O6		
IC203	N8	Q1105	J8		
IC251	*N8	Q1151	P5		
IC252	*N9	Q1201	N6		
IC301	*M8	Q1251	O6		
IC302	*M9	Q1301	L6		
IC303	M8	Q1351	M6		
IC304	K7	Q1401	J6		
IC305	B6	Q1451	K6		
IC351	*L8	Q1501	I5		
IC352	*L9	Q1551	I6		
IC401	*K8	Q1601	G6		
IC402	*K9	Q1651	H6		
IC403	K8	Q1701	E6		
IC451	*K8	Q1751	F6		
IC452	*K9	Q1801	D6		
IC501	*J9	Q1851	D6		

DA-137 -A SIDE-
SUFFIX: -13, 14

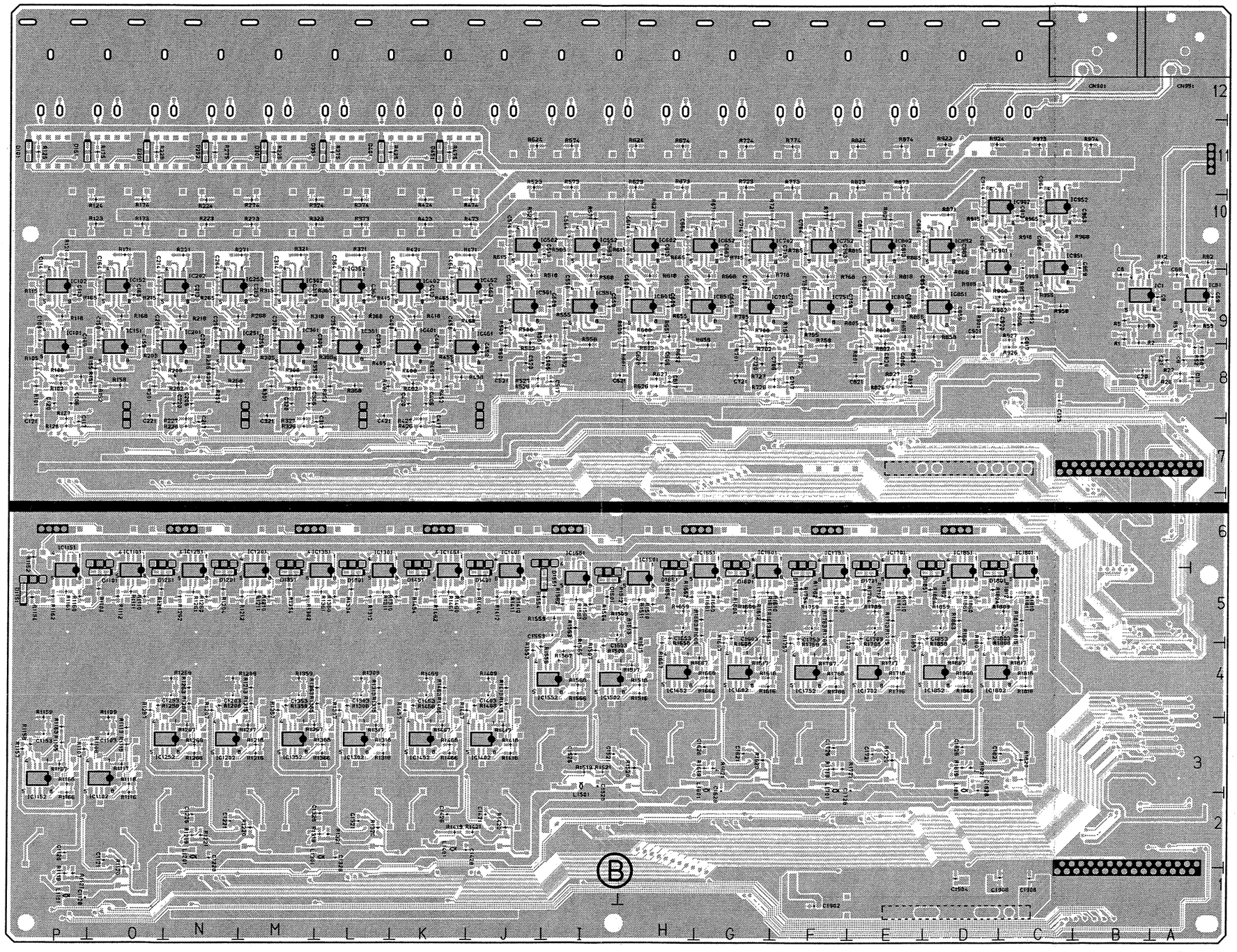

DA-137 -B SIDE-
SUFFIX: -13, 14

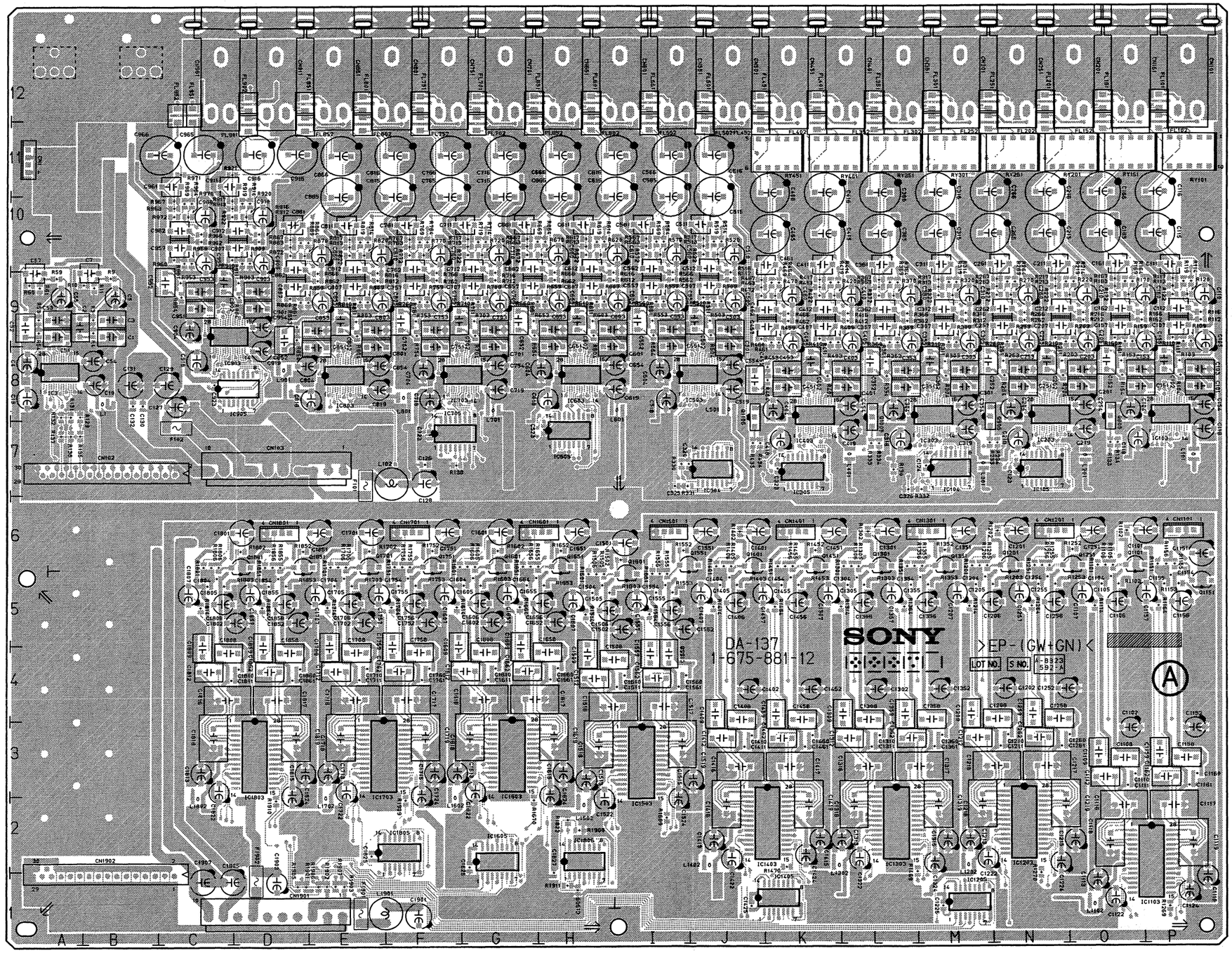

DA-137 -A SIDE-
SUFFIX: -12

DA-137 (1-675-881-12)

CN1	A11	IC502	*J10
CN101	R12	IC503	I8
CN102	B7	IC505	H7
CN103	D7	IC551	*I9
CN151	P12	IC552	*I10
CN201	P12	IC601	*H9
CN251	O12	IC602	*H10
CN301	M12	IC603	H8
CN351	L12	IC651	*G9
CN401	L12	IC652	*G10
CN451	K12	IC701	*G9
CN501	J12	IC702	*G10
CN551	I12	IC703	F8
CN601	I12	IC705	F7
CN651	H12	IC751	*F9
CN701	G12	IC752	*F10
CN751	F12	IC801	*E9
CN801	F12	IC802	*E10
CN851	E12	IC803	E8
CN901	*B12	IC851	*D9
CN911	D12	IC852	*D10
CN951	*A12	IC901	*C10
CN961	C12	IC902	*C10
CN1101	R6	IC903	C8
CN1201	O6	IC905	C8
CN1301	M6	IC951	*C10
CN1401	K6	IC952	*C10
CN1501	I6	IC1101	*P6
CN1601	G6	IC1102	*P3
CN1701	F6	IC1103	P2
CN1801	D6	IC1151	*R6
CN1901	D1	IC1152	*R3
CN1902	B1	IC1201	*M6
		IC1202	*O3
D101	*R11	IC1203	O3
D151	*R11	IC1205	M1
D201	*P11	IC1251	*O6
D252	*O11	IC1252	*O3
D301	*M11	IC1301	*L6
D351	*L11	IC1302	*L3
D401	*L11	IC1303	L3
D451	*K11	IC1351	*L6
D1101	*P5	IC1352	*M3
D1151	*R5	IC1401	*J6
D1201	*O5	IC1402	*J3
D1251	*P5	IC1403	J3
D1301	*L5	IC1405	J1
D1351	*M5	IC1451	*K6
D1401	*J5	IC1452	*K3
D1451	*K5	IC1501	*H6
D1501	*I5	IC1502	*I4
D1551	*I5	IC1503	I3
D1601	*G5	IC1551	*I6
D1651	*H5	IC1552	*I4
D1701	*E5	IC1601	*F6
D1751	*F5	IC1602	*G4
D1801	*D5	IC1603	G3
D1851	*D5	IC1605	G1
		IC1651	*G6
F101	E7	IC1652	*H4
F102	C7	IC1701	*E6
F1901	E1	IC1702	*E4
F1902	D1	IC1703	E3
		IC1751	*F6
IC1	*B9	IC1752	*F4
IC3	A8	IC1801	*C6
IC51	*A9	IC1802	*C4
IC101	*R9	IC1803	D3
IC102	*R9	IC1805	E2
IC103	R7	IC1806	H1
IC104	M7	IC1851	*D6
IC105	O7	IC1852	*D4
IC151	*P9		
IC152	*P9	RY101	R11
IC201	*O9	RY151	P11
IC202	*O9	RY201	P11
IC203	O7	RY251	O11
IC251	*O9	RY301	M11
IC252	*O9	RY351	L11
IC301	*M9	RY401	K11
IC302	*M9	RY451	K11
IC303	L7		
IC304	J7	*:B SIDE	
IC305	K7		
IC351	*L9		
IC352	*L9		
IC401	*K9		
IC402	*K9		
IC403	K7		
IC451	*J9		
IC452	*J9		
IC501	*J9		

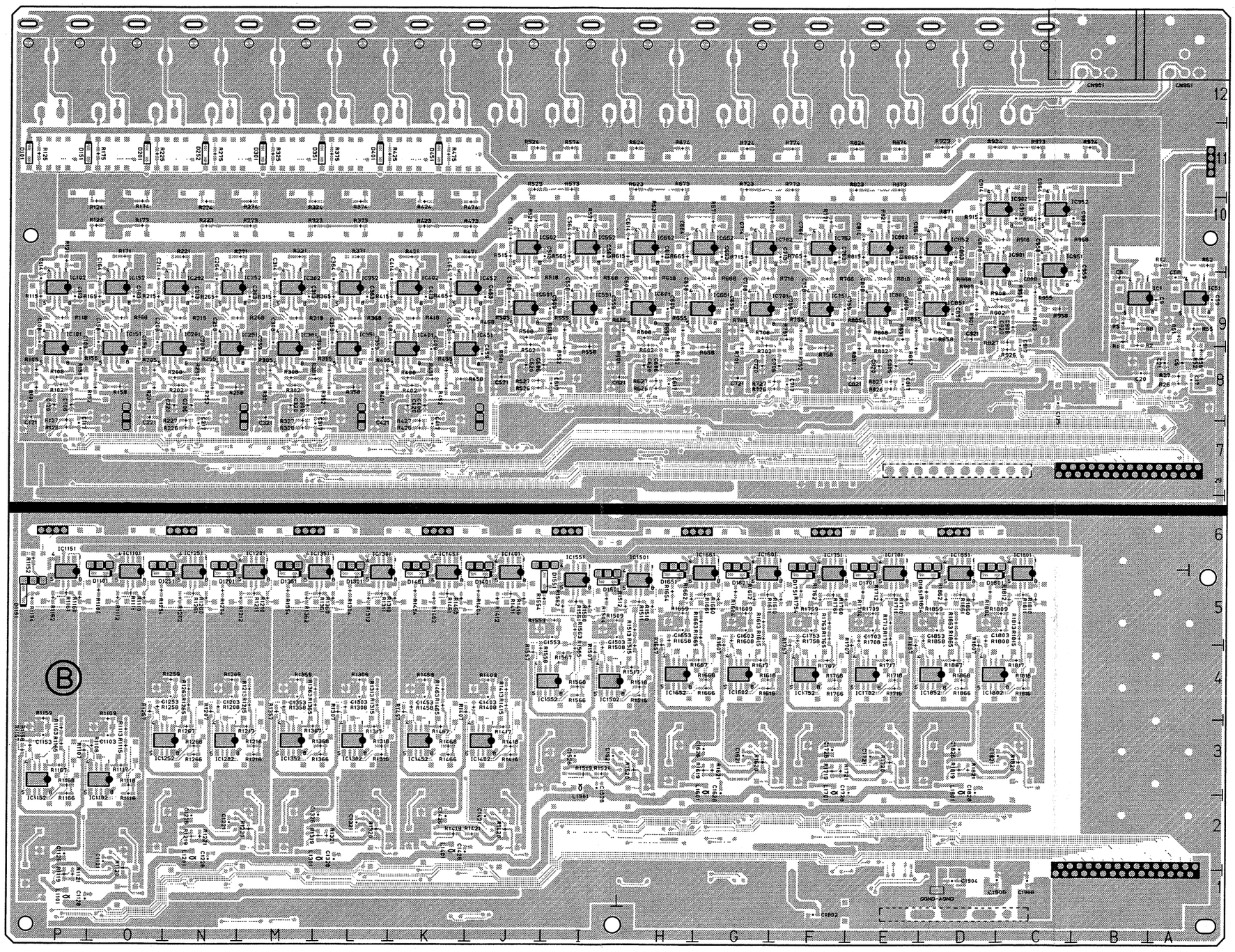

DA-137 -B SIDE-
SUFFIX: -12

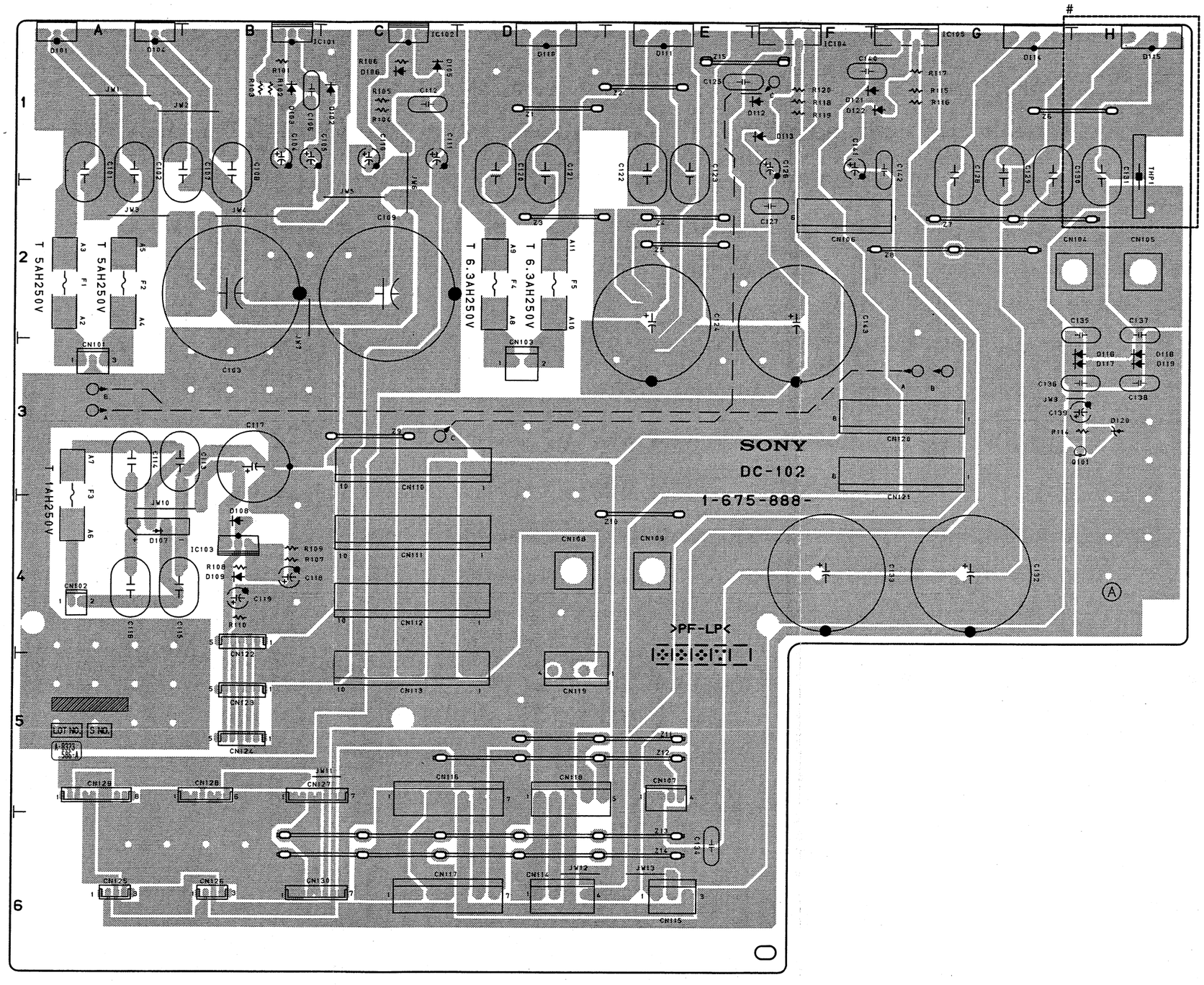

DC-102 -A SIDE-
SUFFIX: -12, 13

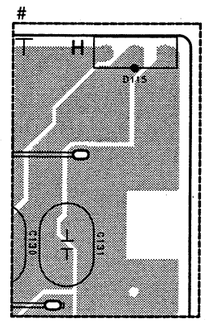

DC-102 -A SIDE-
SUFFIX: -12

DC-102 (1-675-888-12)

CN101	A3
CN102	A4
CN103	D3
CN104	H2
CN105	H2
CN106	F2
CN107	E5
CN108	D4
CN109	E4
CN110	C3
CN111	C4
CN112	C4
CN113	C5
CN114	D6
CN115	E6
CN116	C5
CN117	C6
CN118	D5
CN119	D5
CN120	G3
CN121	G3
CN122	B4
CN123	B5
CN124	B5
CN125	A6
CN126	B6
CN127	C5
CN128	B5
CN129	A5
CN130	C6

D101	A1
D102	C1
D103	B1
D104	A1
D105	C1
D106	C1
D107	A4
D108	B4
D109	B4
D110	D1
D111	E1
D112	F1
D113	F1
D114	G1
D115	H1
D116	H3
D117	H3
D118	H3
D119	H3
D120	H3
D121	G1
D122	G1

IC101	B1
IC102	C1
IC103	B4
IC104	F1
IC105	G1

Q101	H3

DC-102 (1-675-888-13)

CN101	A3
CN102	A4
CN103	D3
CN104	H2
CN105	H2
CN106	F2
CN107	E5
CN108	D4
CN109	E4
CN110	C3
CN111	C4
CN112	C4
CN113	C5
CN114	D6
CN115	E6
CN116	C5
CN117	C6
CN118	D5
CN119	D5
CN120	G3
CN121	G3
CN122	B4
CN123	B5
CN124	B5
CN125	A6
CN126	B6
CN127	C5
CN128	B5
CN129	A5
CN130	C6

D101	A1
D102	C1
D103	B1
D104	A1
D105	C1
D106	C1
D107	A4
D108	B4
D109	B4
D110	D1
D111	E1
D112	F1
D113	F1
D114	G1
D115	H1
D116	H3
D117	H3
D118	H3
D119	H3
D120	H3
D121	G1
D122	G1

IC101	B1
IC102	C1
IC103	B4
IC104	F1
IC105	G1

Q101	H3

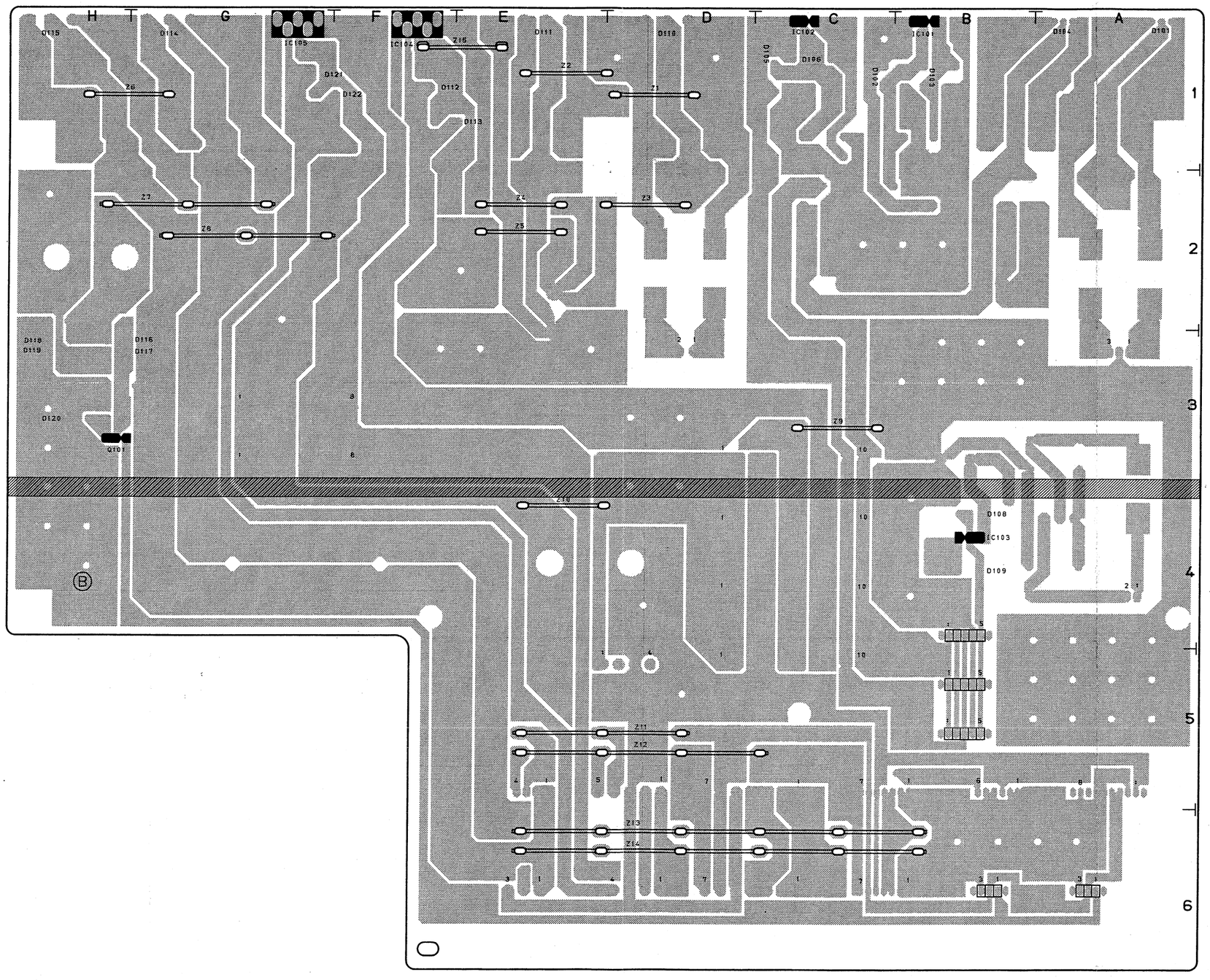

DC-102 -B SIDE-
SUFFIX: -12, 13

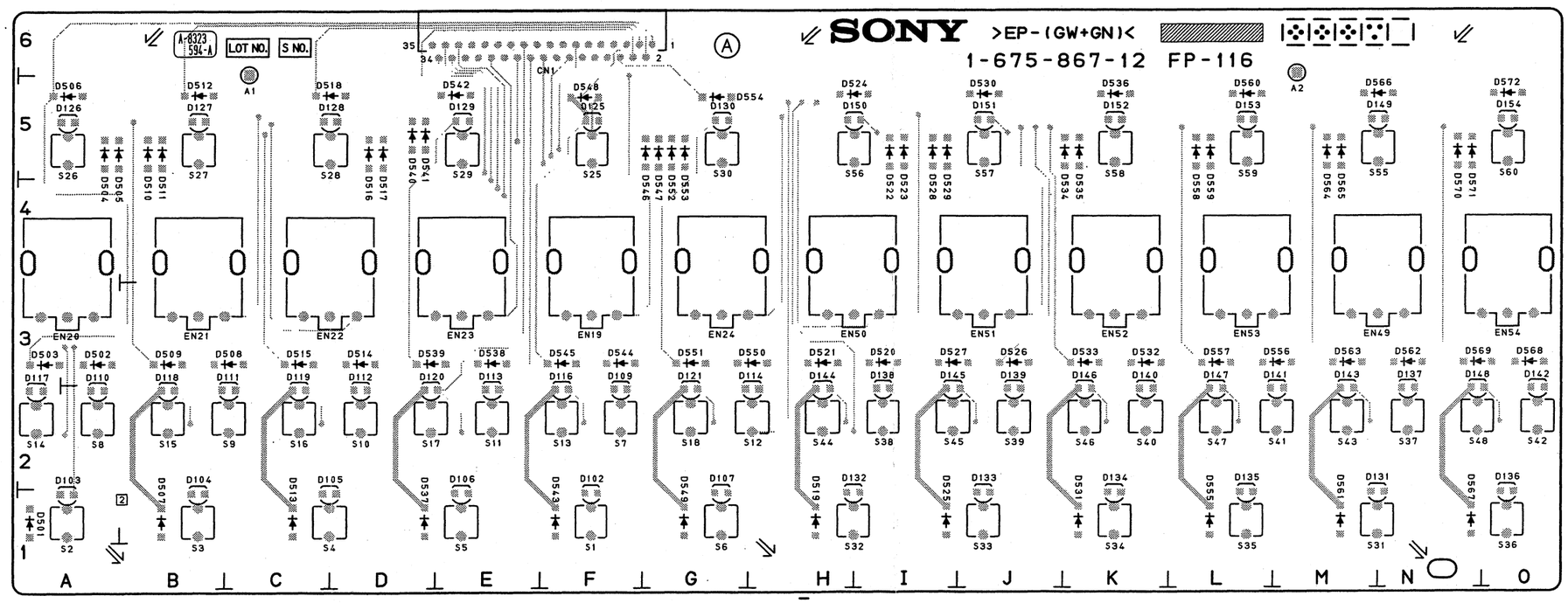

FP-116 -A SIDE-
SUFFIX: -12

FP-116 (1-675-867-12)

CN1	F6	D543	F1
		D544	F3
D102	F1	D545	F3
D103	A1	D546	G5
D104	B1	D547	G5
D105	C1	D548	F5
D106	E1	D549	G1
D107	G1	D550	H3
D109	F2	D551	G3
D110	A2	D552	G5
D111	C2	D553	G5
D112	D2	D554	G5
D113	E2	D555	L1
D114	H2	D556	M3
D116	F2	D557	L3
D117	A2	D558	L5
D118	B2	D559	L5
D119	C2	D560	L5
D120	D2	D561	M1
D121	G2	D562	N3
D125	F5	D563	M3
D126	A5	D564	M5
D127	B5	D565	M5
D128	C5	D566	M5
D129	E5	D567	N1
D130	G5	D568	P3
D131	M1	D569	N3
D132	H1	D570	N5
D133	J1	D571	N5
D134	K1	D572	P5
D135	L1		
D136	P1	EN19	F3
D137	N2	EN20	A3
D138	I2	EN21	B3
D139	J2	EN22	C3
D140	K2	EN23	E3
D141	M2	EN24	G3
D142	P2	EN49	M3
D143	M2	EN50	H3
D144	H2	EN51	J3
D145	I2	EN52	K3
D146	K2	EN53	L3
D147	L2	EN54	P3
D148	N2		
D149	M5	S1	F1
D150	H5	S2	A1
D151	J5	S3	B1
D152	K5	S4	C1
D153	L5	S5	E1
D154	P5	S6	G1
D501	A1	S7	F2
D502	A3	S8	A2
D503	A3	S9	C2
D504	A5	S10	D2
D505	A5	S11	E2
D506	A5	S12	H2
D507	B1	S13	F2
D508	C3	S14	A2
D509	B3	S15	B2
D510	B5	S16	C2
D511	B5	S17	D2
D512	B5	S18	G2
D513	C1	S25	F5
D514	D3	S26	A5
D515	C3	S27	B5
D516	D5	S28	C5
D517	D5	S29	E5
D518	C5	S30	G5
D519	H1	S31	M1
D520	I3	S32	H1
D521	H3	S33	J1
D522	I5	S34	K1
D523	I5	S35	L1
D524	H5	S36	P1
D525	I1	S37	N2
D526	J3	S38	I2
D527	I3	S39	J2
D528	I5	S40	K2
D529	I5	S41	M2
D530	J5	S42	P2
D531	K1	S43	M2
D532	K3	S44	H2
D533	K3	S45	I2
D534	K5	S46	K2
D535	K5	S47	L2
D536	K5	S48	N2
D537	D1	S55	M5
D538	E3	S56	H5
D539	D3	S57	J5
D540	D5	S58	K5
D541	D5	S59	L5
D542	E5	S60	P5

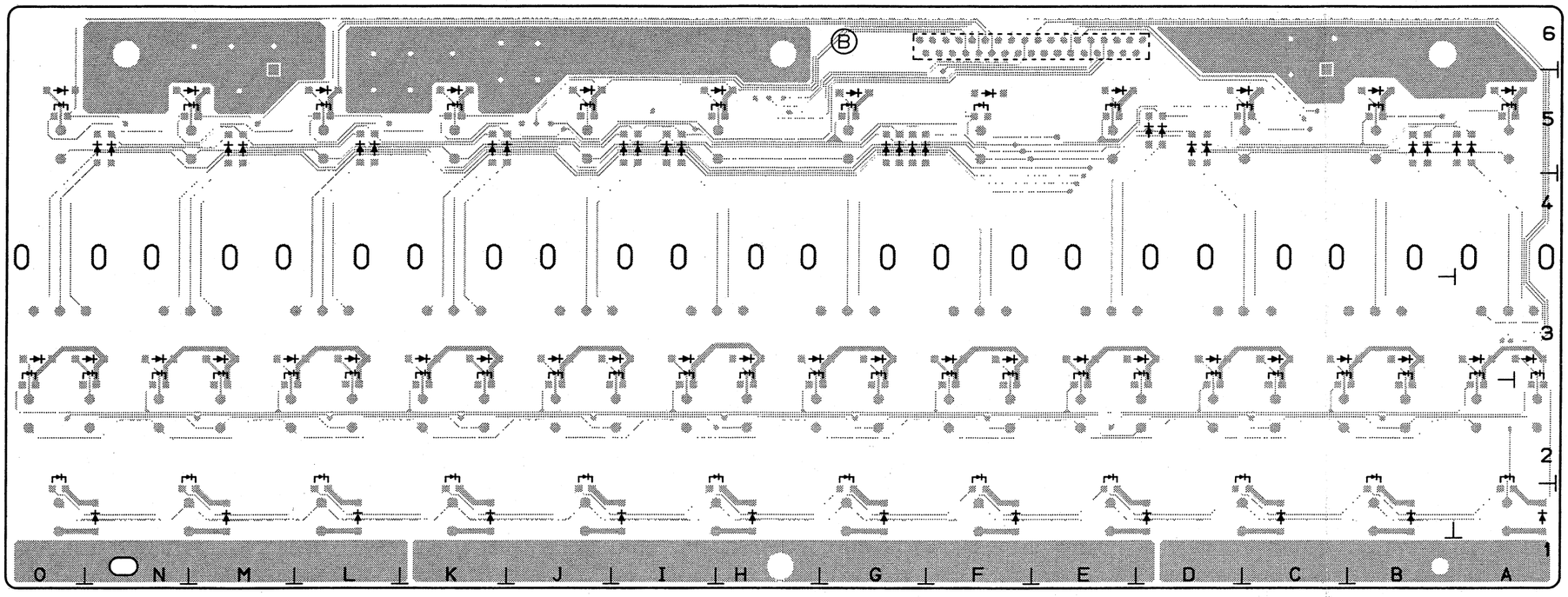

FP-116 -B SIDE-
SUFFIX: -12

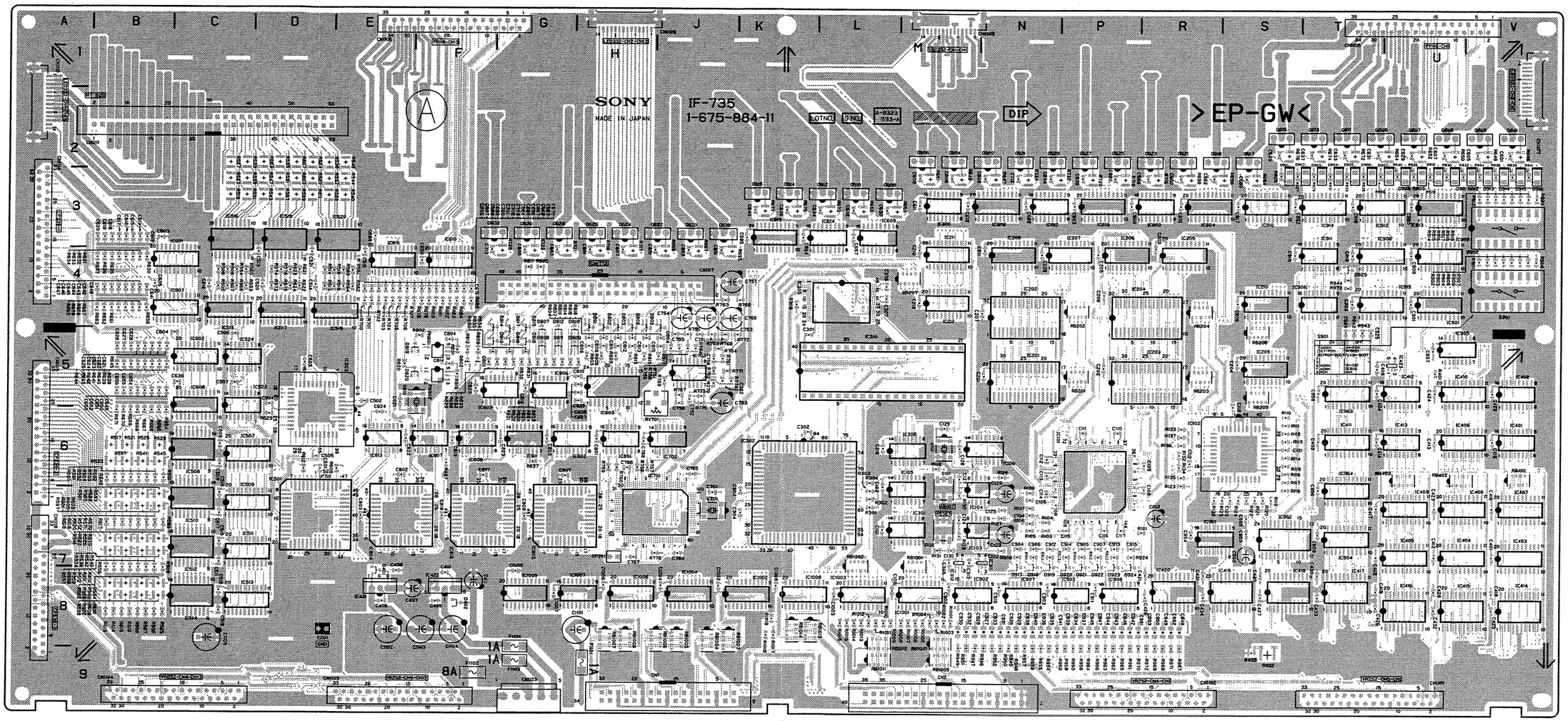

IF-735 -A SIDE-
SUFFIX: -11

IF-735 (1-675-884-11)

CN1	J9	D402	F8	D820	F5	D920	P7	IC201	N5	IC402	V5	IC422	F8	IC601	B4	IC803	H5	IC911	T4	Q602	N2	Q622	J3	TP701	H7
CN2	M9	D801	H4	D901	S3	D921	P7	IC202	N5	IC403	V7	IC423	U5	IC602	C5	IC804	E7	IC912	T3	Q603	V2	Q623	R2		
CN1101	T9	D802	H4	D902	T3	D922	P7	IC203	P5	IC404	U7	IC501	D7	IC603	R3	IC805	G7	IC913	U3	Q604	M2	Q624	H3	X101	M6
CN1102	R9	D803	H4	D903	T3	D923	P7	IC204	P5	IC405	U7	IC502	D6	IC604	R3	IC806	G5	IC914	T3	Q605	U2	Q625	P2	X701	J7
CN1103	E9	D804	J4	D904	T3	D924	P7	IC205	R4	IC406	U6	IC507	C6	IC605	M3	IC807	F6	IC915	T4	Q606	M2	Q626	H3	X801	F5
CN1104	C9	D805	H4	D905	T3	D925	T4	IC206	P4	IC407	V7	IC508	C6	IC606	M3	IC808	F6	IC961	R7	Q607	U2	Q627	P2		
CN1105	U1	D806	H4	D906	T3			IC207	N4	IC408	U7	IC509	C7	IC607	B4	IC809	F5	IC962	S7	Q608	L3	Q628	G3		
CN1106	F1	D807	G5	D907	U3	E201	D8	IC208	N4	IC409	U7	IC510	C7	IC608	C6	IC811	G6	IC963	T5	Q609	T2	Q629	N2		
CN1107	V1	D808	G5	D908	U3			IC209	S5	IC410	U5	IC511	C7	IC609	L3	IC812	F7	IC964	T7	Q610	L3	Q630	G3		
CN1108	M1	D809	H5	D909	U3	F1101	H9	IC210	S4	IC411	T6	IC512	C7	IC610	F4	IC813	E6	IC965	U5	Q611	T2	Q631	N2		
CN1109	H1	D810	H5	D910	U3	F1102	F9	IC211	M4	IC412	U5	IC513	C8	IC612	N3	IC901	U4	IC1001	M8	Q612	L3	Q632	F3		
CN1110	A2	D811	G5	D911	U3	F1103	G9	IC212	M4	IC413	U6	IC514	C8	IC613	P3	IC902	M8	IC1002	J8	Q613	T2	Q801	F5		
CN1111	C2	D812	G5	D912	V3	F1104	G8	IC301	L7	IC414	V8	IC515	C4	IC614	K3	IC903	P8	IC1003	L8	Q614	K3	Q802	F5		
CN1114	A3	D813	F5	D913	V3			IC302	K7	IC415	U8	IC516	C4	IC615	K3	IC904	T7	IC1004	J8	Q615	S2				
CN1115	A6	D814	F4	D914	V3	IC101	P6	IC305	K4	IC416	U8	IC517	D4	IC616	E4	IC905	U4	IC1005	G8	Q616	K3	RV701	J5		
CN1117	H4	D815	G4	D915	V3	IC102	S6	IC306	L6	IC417	T8	IC518	D4	IC701	J7	IC906	T4	IC1006	H8	Q617	S2				
CN1118	A8	D816	G5	D916	V3	IC103	M7	IC310	K5	IC418	S8	IC519	D4	IC702	J6	IC907	N8	IC1007	G8	Q618	J3	S101	M6		
CN1123	G9	D817	G5	D917	N7	IC104	M7	IC311	N7	IC419	R8	IC520	D4	IC703	J5	IC908	P8	IC1008	K8	Q619	R2	S102	M7		
		D818	G5	D918	N7	IC105	L7	IC312	M7	IC420	R8	IC523	C6	IC801	H6	IC909	T4			Q620	J3	S901	V4		
D401	E8	D819	F5	D919	N7	IC106	M6	IC401	V6	IC421	E8	IC524	C5	IC802	G6	IC910	S3	Q601	V2	Q621	R2	S902	V3		

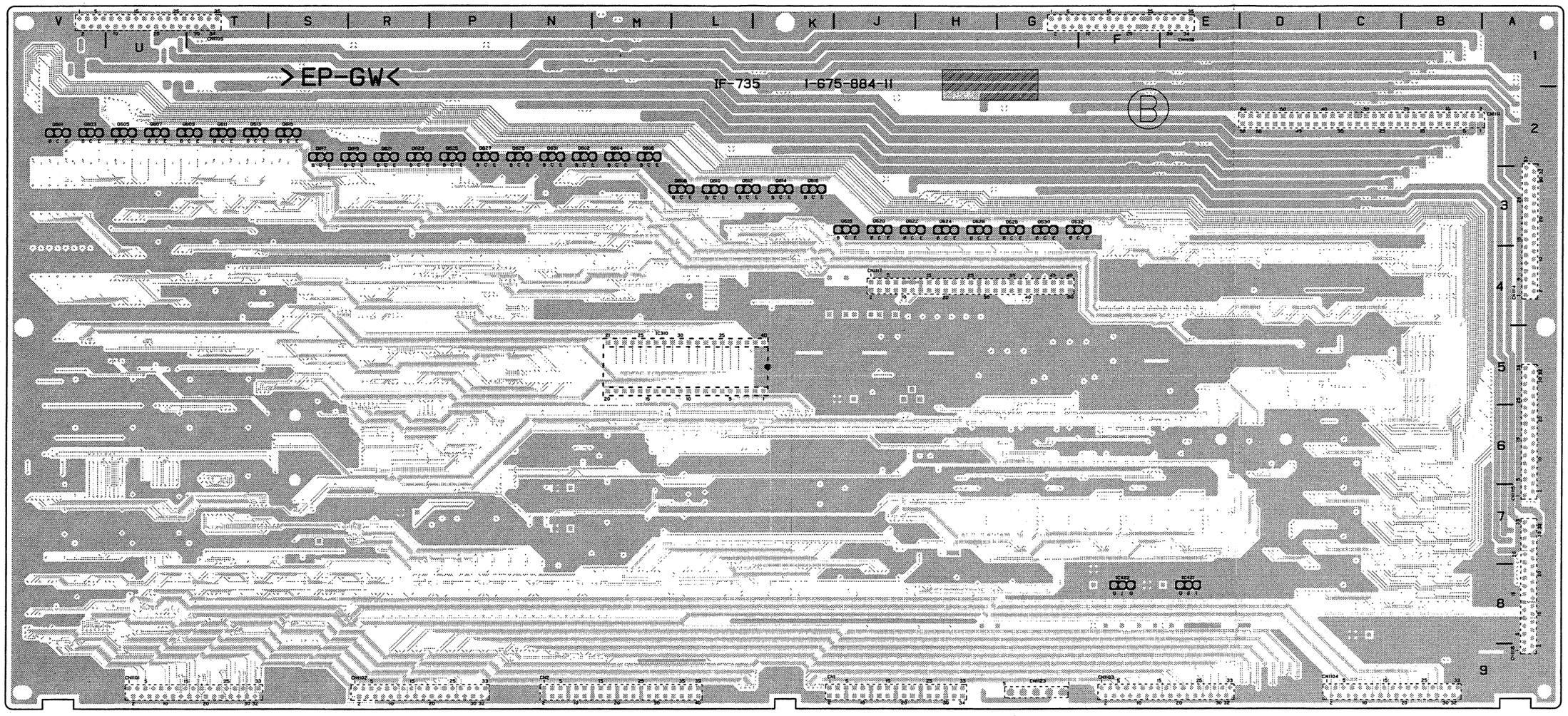

IF-735 -B SIDE-
SUFFIX: -11

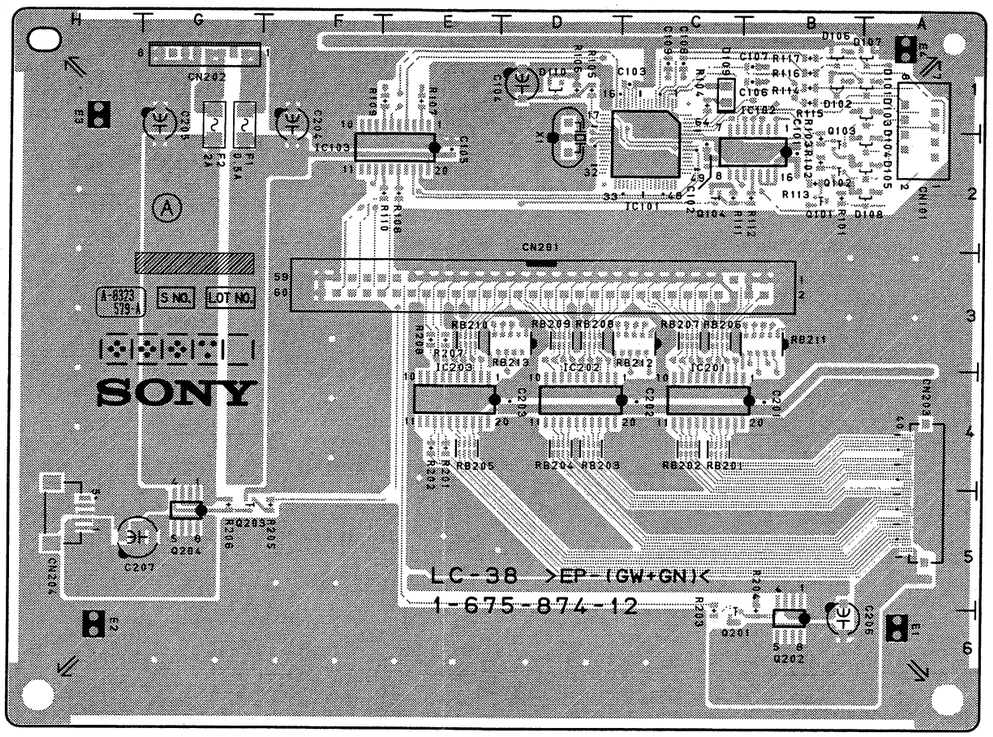

LC-38 -A SIDE-
SUFFIX: -12

LC-38 (1-675-874-12)

CN101	A1
CN201	D3
CN202	G1
CN203	A5
CN204	H5
D101	A1
D102	B1
D103	A1
D104	A2
D105	A2
D106	B1
D107	A1
D108	A2
D109	C1
D110	D1
E1	A6
E2	H6
E3	H1
E4	A1
F1	G1
F2	G1
IC101	C2
IC102	B1
IC103	E1
IC201	B4
IC202	D4
IC203	E4
Q101	B2
Q102	B2
Q103	B2
Q104	C2
Q201	C6
Q202	B6
Q203	G5
Q204	G5
X1	D2

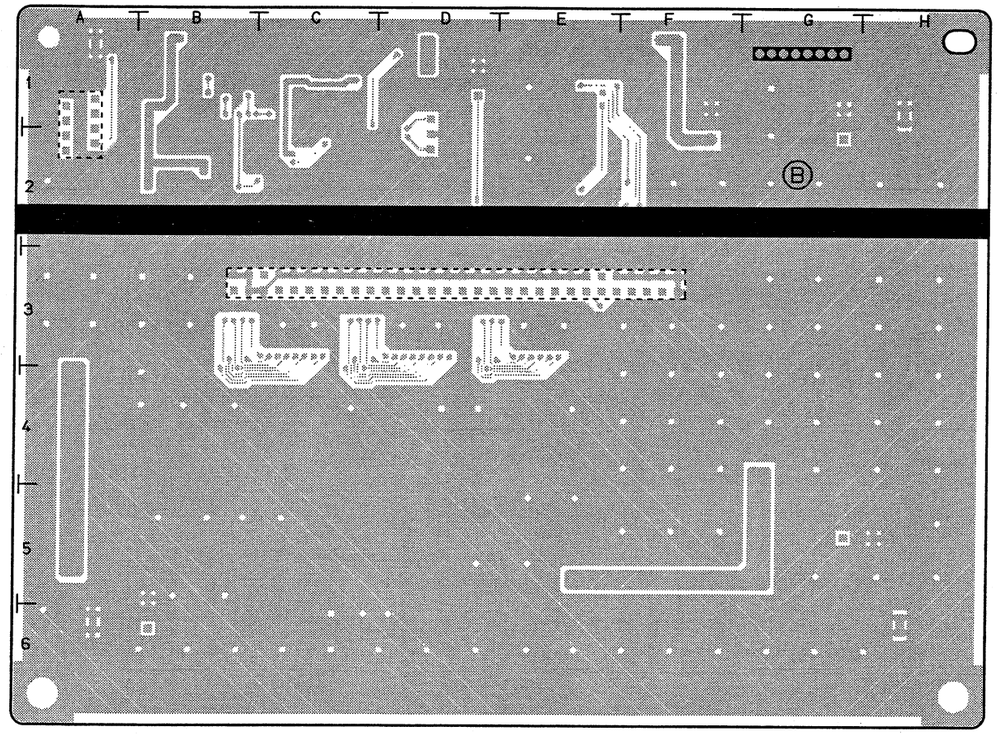

LC-38 -B SIDE-
SUFFIX: -12

SONY-SP1439 / DRUCK 30

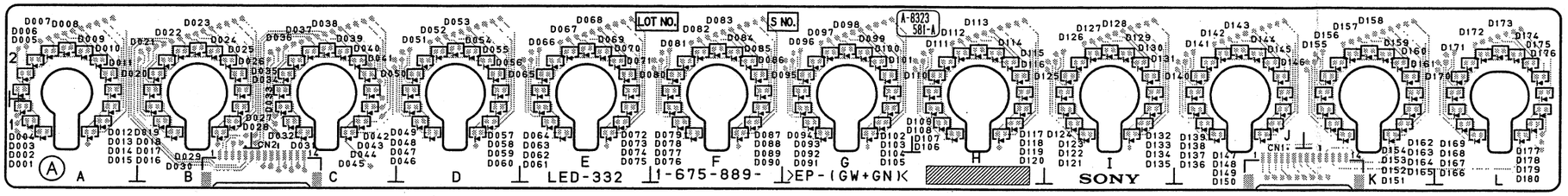

LED-332 -A SIDE-
SUFFIX: -11, 12

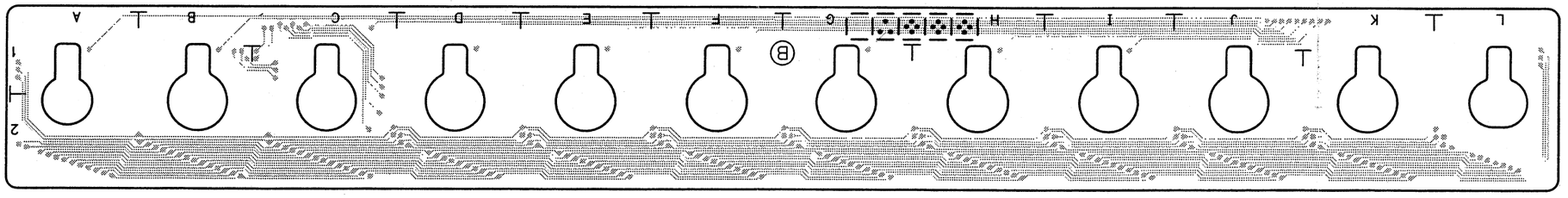

LED-332 -B SIDE-
SUFFIX: -11, 12

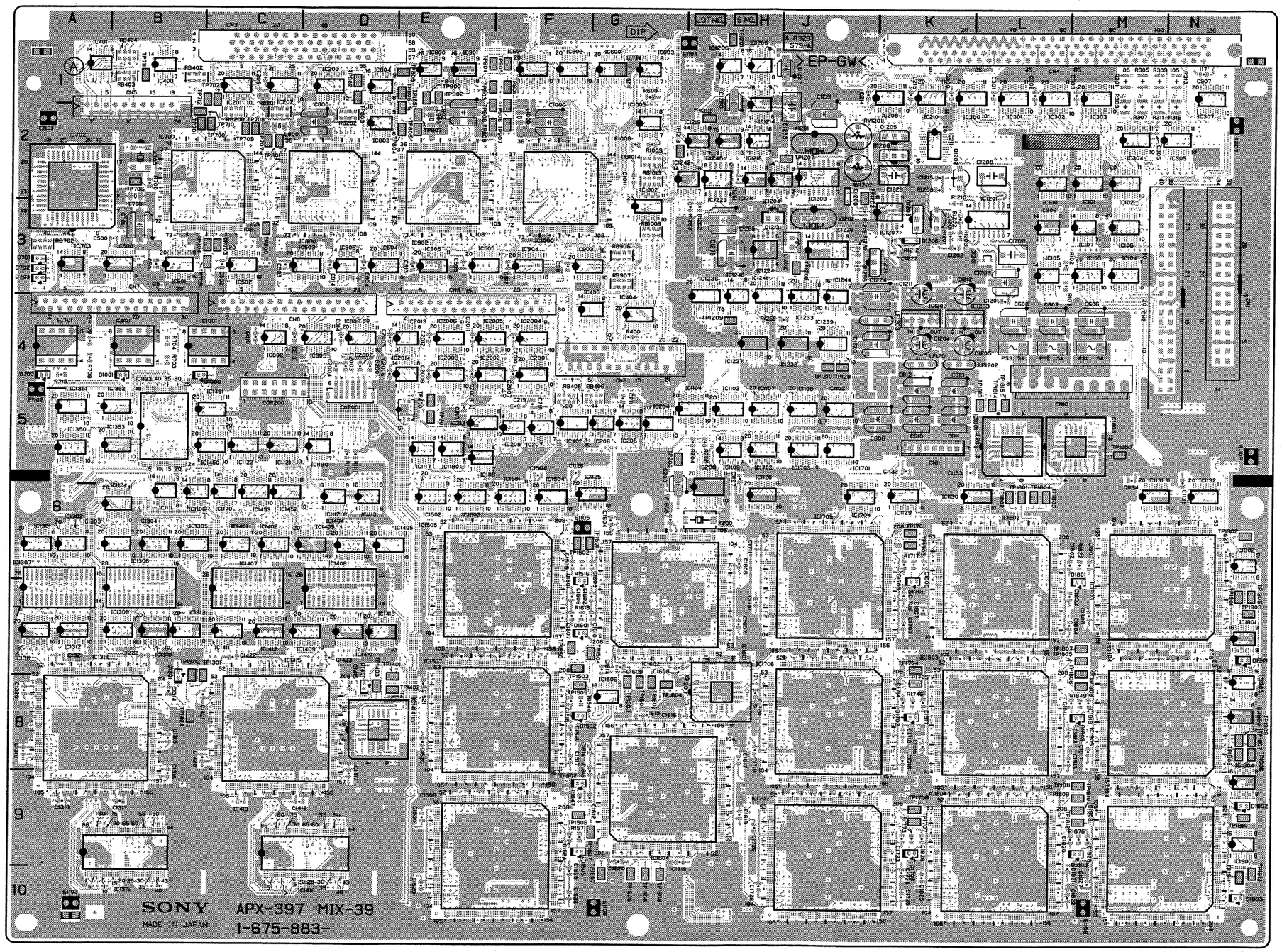

MIX-39 -A SIDE-
SUFFIX: -12, 13

MIX-39 (1-675-883-12,13)

CN1	N3	IC403	F4	IC1309	B7
CN2	M3	IC404	G4	IC1310	B7
CN3	C1	IC500	A3	IC1311	A7
CN4	L1	IC501	B3	IC1312	A7
CN5	B2	IC502	C3	IC1313	B7
CN6	G4	IC503	C3	IC1314	A8
CN7	B4	IC504	D3	IC1315	A10
CN8	C4	IC505	E3	IC1350	A5
CN9	E4	IC600	G1	IC1351	A5
CN10	M4	IC601	F1	IC1352	A5
CN11	K5	IC602	F1	IC1353	A5
CN2001	D5	IC603	G1	IC1401	C6
		IC700	C2	IC1402	C6
COR200	C4	IC701	A4	IC1403	D6
		IC702	A2	IC1404	D6
D700	A4	IC703	A3	IC1405	D6
D701	A3	IC800	D2	IC1406	D7
D702	A3	IC801	B4	IC1407	C7
D703	A3	IC802	C4	IC1409	C7
D1000	B4	IC803	D2	IC1410	D7
D1001	B4	IC804	D1	IC1411	C7
D1201	L3	IC805	D4	IC1412	C7
D1202	*K4	IC806	D4	IC1413	D7
D1203	*K4	IC900	E1	IC1414	D8
D1204	*K4	IC901	E1	IC1415	C8
D1205	*K4	IC902	E2	IC1416	C10
D1206	K3	IC903	F3	IC1450	B5
D1207	*J3	IC904	F3	IC1451	B5
D1208	J2	IC905	E3	IC1452	C6
D1209	*J2	IC906	D3	IC1453	C6
D1210	*J3	IC1000	F2	IC1501	F6
D1212	*H3	IC1001	B4	IC1502	E6
D1213	H3	IC1002	G3	IC1503	E6
D1301	B8	IC1003	G2	IC1504	F6
D1401	D8	IC1102	J5	IC1505	F7
D1501	F7	IC1103	H5	IC1506	G8
D1502	F8	IC1104	G5	IC1507	F8
D1503	F9	IC1106	B6	IC1508	F9
D1601	F7	IC1107	H5	IC1601	H8
D1602	F9	IC1108	J5	IC1602	G7
D1701	K6	IC1109	H5	IC1604	G9
D1702	K8	IC1111	B6	IC1701	J5
D1703	K9	IC1112	D6	IC1702	H5
D1801	M6	IC1113	D6	IC1703	J5
D1802	M8	IC1117	E5	IC1704	J6
D1803	M9	IC1118	E5	IC1705	J7
D1901	N7	IC1121	C5	IC1706	J8
D1902	N9	IC1122	C5	IC1707	J9
D1903	N10	IC1124	B6	IC1801	L5
		IC1125	F6	IC1802	L7
E1101	A2	IC1126	H6	IC1803	L8
E1102	A5	IC1129	K6	IC1804	L9
E1103	A10	IC1130	K6	IC1805	M5
E1104	H1	IC1131	M6	IC1901	N7
E1105	F6	IC1132	N6	IC1902	N6
E1106	G10	IC1133	B5	IC1903	M7
E1107	N2	IC1170	C6	IC1904	N9
E1108	N5	IC1180	E5	IC1905	N8
E1109	M10	IC1190	D5	IC1906	M8
		IC1201	K3	IC1907	N9
IC100	L2	IC1202	K4	IC1908	M9
IC101	M2	IC1203	K4	IC1950	N8
IC102	M2	IC1204	H2	IC2001	F4
IC103	M3	IC1205	H1	IC2002	E4
IC104	M3	IC1206	H1	IC2003	E4
IC105	L3	IC1207	K3	IC2004	F4
IC106	M3	IC1209	J2	IC2005	E4
IC107	M3	IC1211	H2	IC2006	E4
IC200	H6	IC1214	H2	IC2013	E4
IC201	C1	IC1216	H2	IC2014	E4
IC202	C1	IC1219	H2		
IC203	D1	IC1222	*H3	Q1201	K3
IC204	G5	IC1223	H2	Q1202	K2
IC205	G5	IC1224	H3	Q1203	K3
IC206	G5	IC1226	J3	Q1204	J3
IC207	F5	IC1233	J4	Q1205	K2
IC208	F5	IC1236	H4	Q1206	K2
IC209	J2	IC1237	H4		
IC210	K2	IC1238	J4	RV1201	J2
IC211	K2	IC1239	J4	RV1202	J2
IC212	E5	IC1241	H4		
IC300	K2	IC1242	G2	S1	E5
IC301	L2	IC1244	J4		
IC302	L2	IC1245	H2	TP200	G5
IC303	M2	IC1246	H4	TP201	E5
IC304	M2	IC1301	A6	TP400	E5
IC305	M2	IC1302	A6	TP700	C2
IC306	L3	IC1303	B6	TP701	B2
IC307	N2	IC1304	B6	TP702	C1
IC400	B1	IC1305	B6	TP703	C3
IC401	A1	IC1306	B7	TP704	C3
IC402	F5	IC1307	A7	TP705	C3

TP706	B2	X200	H6
TP707	C2	X700	B2
TP708	C2	X1201	J2
TP709	C2	X1202	J3
TP710	B2		
TP711	B1	*:B SIDE	
TP712	C1		
TP800	C3		
TP801	C2		
TP802	D1		
TP803	D1		
TP804	E2		
TP805	E1		
TP806	E2		
TP807	E2		
TP808	E1		
TP900	E1		
TP901	F1		
TP902	E1		
TP903	E1		
TP904	E1		
TP905	F1		
TP906	F2		
TP907	F2		
TP908	E2		
TP909	E2		
TP1201	H1		
TP1202	J2		
TP1207	J2		
TP1208	J3		
TP1209	H4		
TP1210	J4		
TP1211	J4		
TP1212	H2		
TP1213	G2		
TP1301	C8		
TP1302	B8		
TP1401	E8		
TP1402	E8		
TP1403	D8		
TP1404	B8		
TP1501	G6		
TP1502	F6		
TP1503	F7		
TP1504	G7		
TP1505	F8		
TP1506	F9		
TP1507	G9		
TP1550	F7		
TP1551	E2		
TP1601	G8		
TP1602	G8		
TP1603	G8		
TP1604	G8		
TP1605	G10		
TP1606	G10		
TP1607	G10		
TP1608	G10		
TP1701	K6		
TP1703	K6		
TP1704	K7		
TP1705	K8		
TP1706	K9		
TP1707	K9		
TP1801	L6		
TP1802	L6		
TP1803	L6		
TP1804	L6		
TP1805	M7		
TP1806	M7		
TP1807	M7		
TP1808	M8		
TP1809	M9		
TP1810	M9		
TP1811	M9		
TP1812	M9		
TP1813	L5		
TP1814	L5		
TP1815	L5		
TP1850	M5		
TP1901	N7		
TP1902	N6		
TP1903	N7		
TP1905	N7		
TP1906	N8		
TP1907	N8		
TP1908	N8		
TP1909	N8		
TP1910	N9		
TP1911	N10		
TP1912	N10		

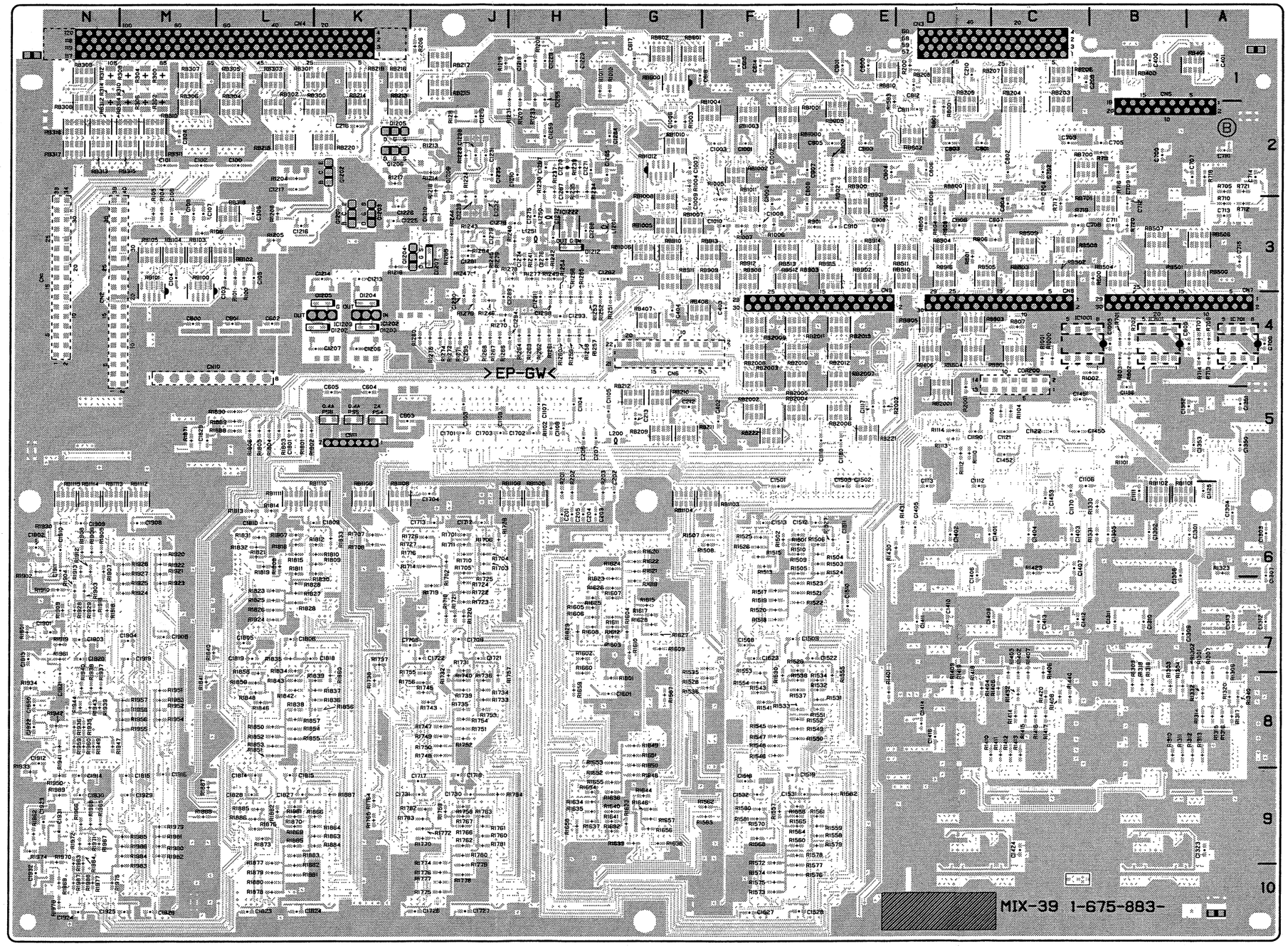

MIX-39 -B SIDE-
SUFFIX: -12, 13

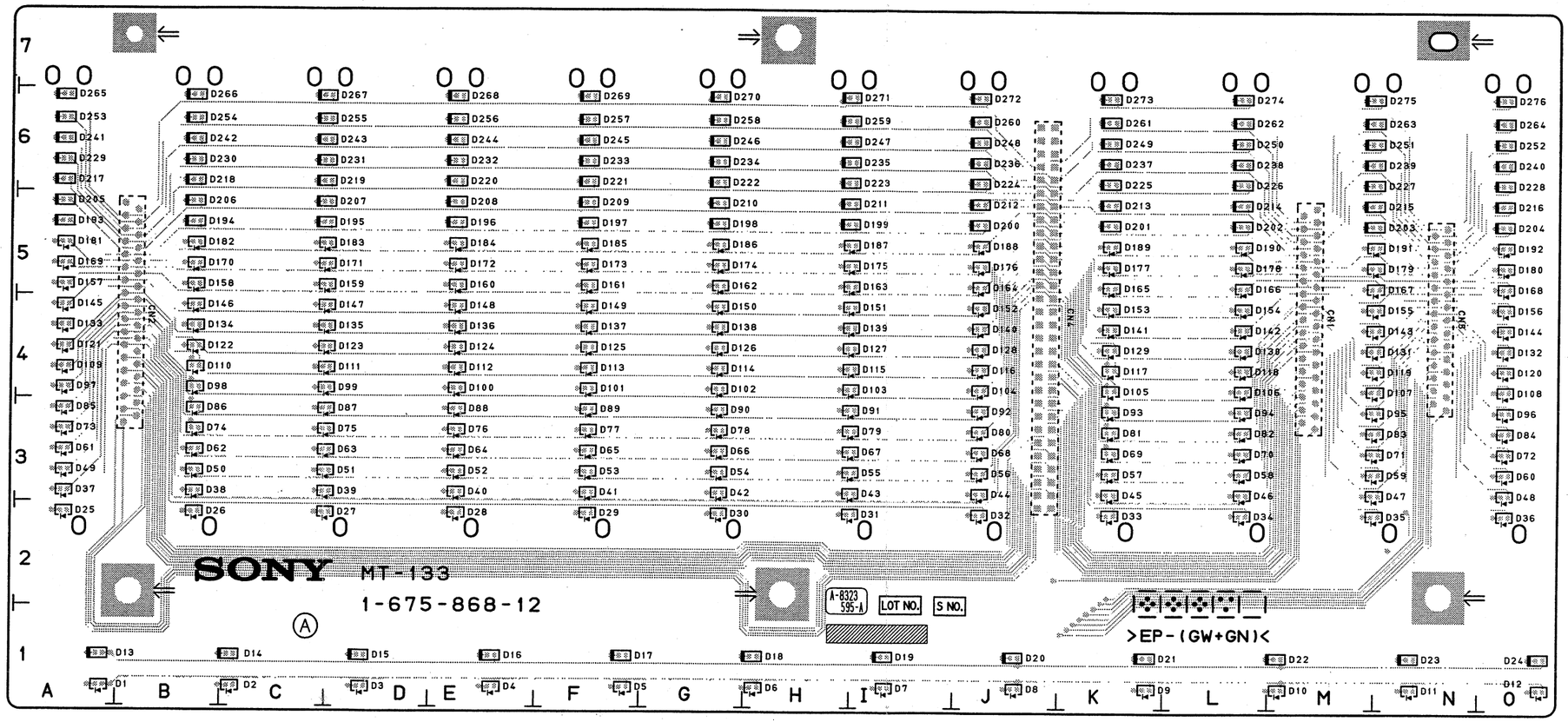

MT-133/133A -A SIDE-
SUFFIX: -12

MT-133 (1-675-868-12)

CN1	M4	D88	E3
CN2	B4	D89	F3
CN4	J4	D90	G3
CN5	N4	D91	H3
		D92	J3
D1	A1	D93	K3
D2	C1	D94	L3
D3	D1	D95	M3
D4	E1	D96	P3
D5	F1	D97	A4
D6	H1	D98	B4
D7	I1	D99	C4
D8	J1	D100	E4
D9	K1	D101	F4
D10	M1	D102	G4
D11	N1	D103	H4
D12	P1	D104	J4
D13	A1	D105	K4
D14	C1	D106	L4
D15	D1	D107	M4
D16	E1	D108	P4
D17	F1	D109	A4
D18	H1	D110	B4
D19	I1	D111	C4
D20	J1	D112	E4
D21	K1	D113	F4
D22	M1	D114	G4
D23	N1	D115	H4
D24	P1	D116	J4
D25	A2	D117	K4
D26	B2	D118	L4
D27	C2	D119	M4
D28	E2	D120	P4
D29	F2	D121	A4
D30	G2	D122	B4
D31	H2	D123	C4
D32	J2	D124	E4
D33	K2	D125	F4
D34	L2	D126	G4
D35	M2	D127	H4
D36	P2	D128	J4
D37	A3	D129	K4
D38	B3	D130	L4
D39	C3	D131	M4
D40	E3	D132	P4
D41	F3	D133	A4
D42	G3	D134	B4
D43	H3	D135	C4
D44	J3	D136	E4
D45	K3	D137	F4
D46	L3	D138	G4
D47	M3	D139	H4
D48	P3	D140	J4
D49	A3	D141	K4
D50	B3	D142	L4
D51	C3	D143	M4
D52	E3	D144	P4
D53	F3	D145	A4
D54	G3	D146	B4
D55	H3	D147	C4
D56	J3	D148	E4
D57	K3	D149	F4
D58	L3	D150	G4
D59	M3	D151	H4
D60	P3	D152	J4
D61	A3	D153	K4
D62	B3	D154	L4
D63	C3	D155	M4
D64	E3	D156	P4
D65	F3	D157	A5
D66	G3	D158	B5
D67	H3	D159	C5
D68	J3	D160	E5
D69	K3	D161	F5
D70	L3	D162	G5
D71	M3	D163	H5
D72	P3	D164	J5
D73	A3	D165	K5
D74	B3	D166	L5
D75	C3	D167	M5
D76	E3	D168	P5
D77	F3	D169	A5
D78	G3	D170	B5
D79	H3	D171	C5
D80	J3	D172	E5
D81	K3	D173	F5
D82	L3	D174	G5
D83	M3	D175	H5
D84	P3	D176	J5
D85	A3	D177	K5
D86	B3	D178	L5
D87	C3	D179	M5

D180	P5	D272	J6
D181	A5	D273	K6
D182	B5	D274	L6
D183	C5	D275	M6
D184	E5	D276	P6
D185	F5		
D186	G5		
D187	H5		
D188	J5		
D189	K5		
D190	L5		
D191	M5		
D192	P5		
D193	A5		
D194	B5		
D195	C5		
D196	E5		
D197	F5		
D198	G5		
D199	H5		
D200	J5		
D201	K5		
D202	L5		
D203	M5		
D204	P5		
D205	A5		
D206	B5		
D207	C5		
D208	E5		
D209	F5		
D210	G5		
D211	H5		
D212	J5		
D213	K5		
D214	L5		
D215	M5		
D216	P5		
D217	A6		
D218	B6		
D219	C6		
D220	E6		
D221	F6		
D222	G6		
D223	H6		
D224	J6		
D225	K6		
D226	L6		
D227	M6		
D228	P6		
D229	A6		
D230	B6		
D231	C6		
D232	E6		
D233	F6		
D234	G6		
D235	H6		
D236	J6		
D237	K6		
D238	L6		
D239	M6		
D240	P6		
D241	A6		
D242	B6		
D243	C6		
D244	E6		
D245	F6		
D246	G6		
D247	H6		
D248	J6		
D249	K6		
D250	L6		
D251	M6		
D252	P6		
D253	A6		
D254	B6		
D255	C6		
D256	E6		
D257	F6		
D258	G6		
D259	H6		
D260	J6		
D261	K6		
D262	L6		
D263	M6		
D264	P6		
D265	A6		
D266	B6		
D267	C6		
D268	E6		
D269	F6		
D270	G6		
D271	H6		

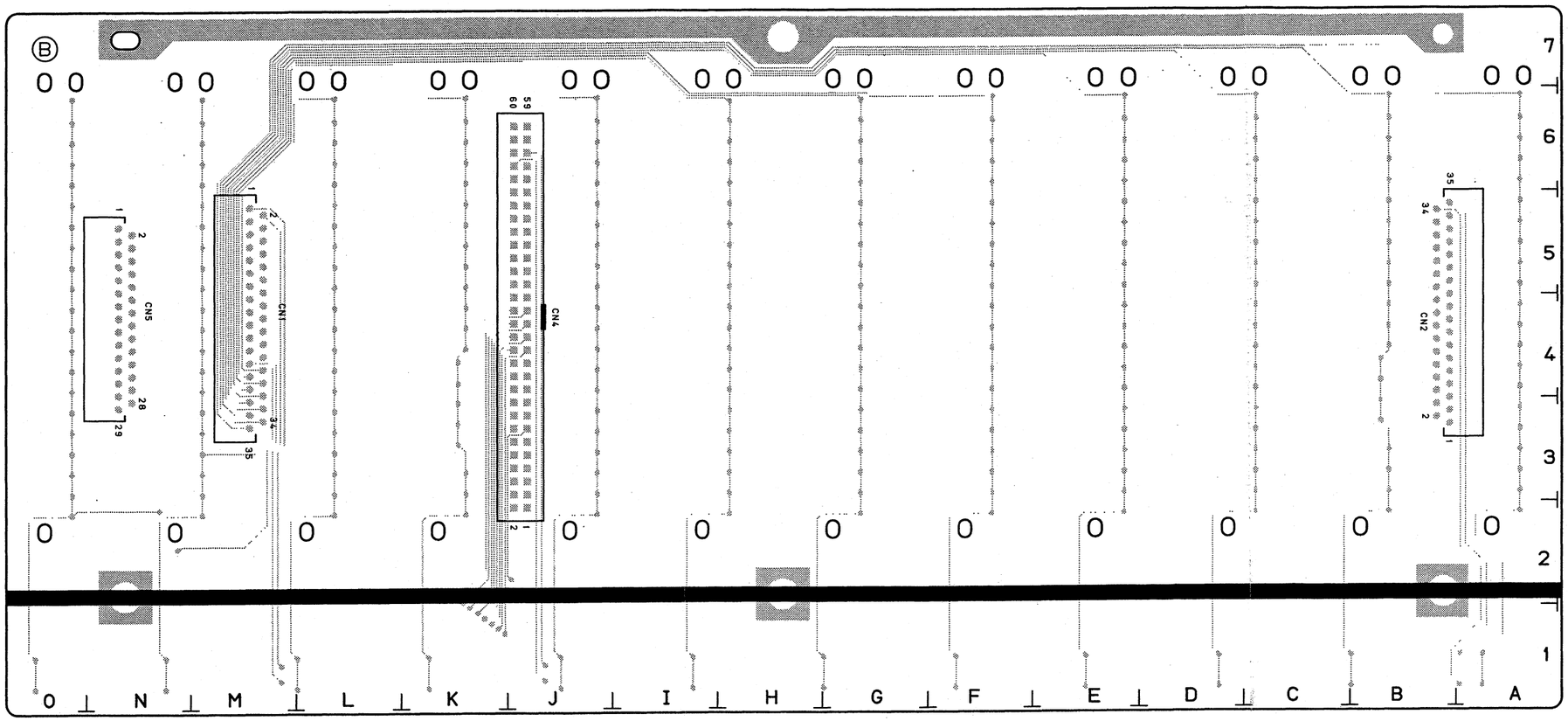

MT-133/133A -B SIDE-
SUFFIX: -12

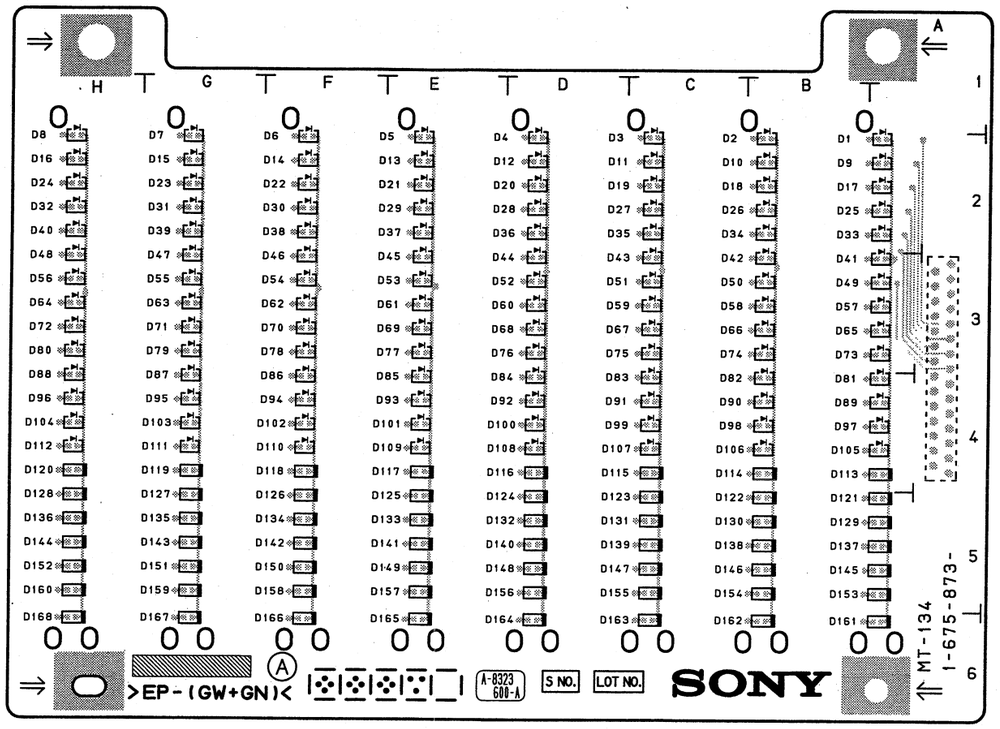

MT-134 -A SIDE-
SUFFIX: -11, 12

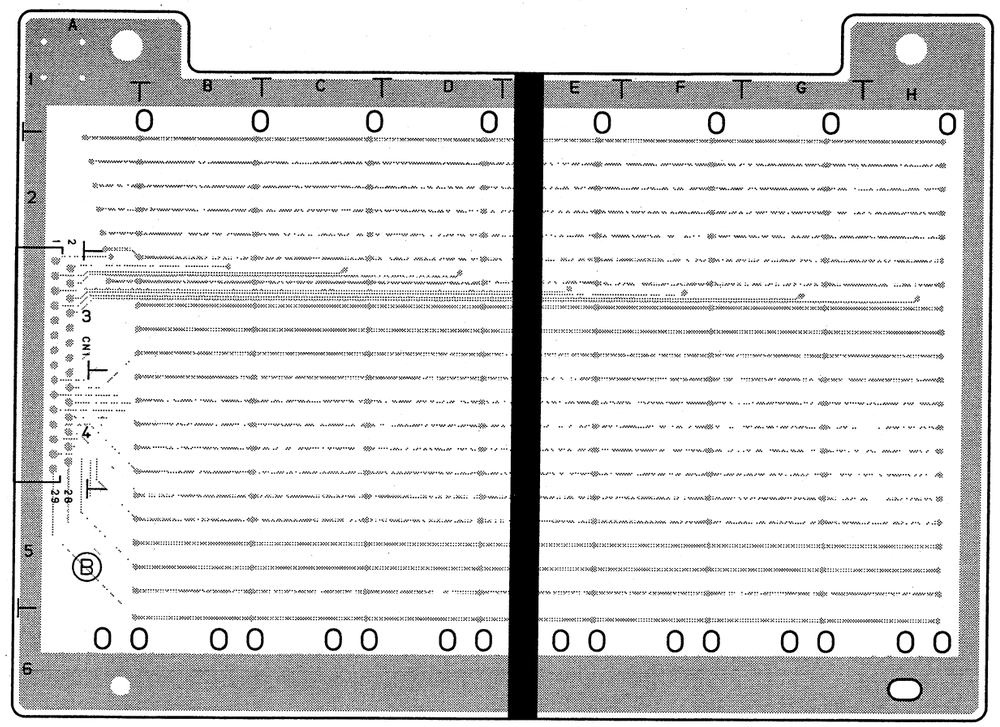

MT-134 -B SIDE-
SUFFIX: -11, 12

MT-134 (1-675-873-11,12)

CN1	*A3	D29	F2	D59	D3	D89	B4	D119	G4	D149	F5
		D30	F2	D60	E3	D90	C4	D120	H4	D150	F5
D1	B2	D31	G2	D61	F3	D91	D4	D121	B5	D151	G5
D2	C2	D32	H2	D62	F3	D92	E4	D122	C5	D152	H5
D3	D2	D33	B2	D63	G3	D93	F4	D123	D5	D153	B5
D4	E2	D34	C2	D64	H3	D94	F4	D124	E5	D154	C5
D5	F2	D35	D2	D65	B3	D95	G4	D125	F5	D155	D5
D6	F2	D36	E2	D66	C3	D96	H4	D126	F5	D156	E5
D7	G2	D37	F2	D67	D3	D97	B4	D127	G5	D157	F5
D8	H2	D38	F2	D68	E3	D98	C4	D128	H5	D158	F5
D9	B2	D39	G2	D69	F3	D99	D4	D129	B5	D159	G5
D10	C2	D40	H2	D70	F3	D100	E4	D130	C5	D160	H5
D11	D2	D41	B3	D71	G3	D101	F4	D131	D5	D161	B6
D12	E2	D42	C3	D72	H3	D102	F4	D132	E5	D162	C6
D13	F2	D43	D3	D73	B3	D103	G4	D133	F5	D163	D6
D14	F2	D44	E3	D74	C3	D104	H4	D134	F5	D164	E6
D15	G2	D45	F3	D75	D3	D105	B4	D135	G5	D165	F6
D16	H2	D46	F3	D76	E3	D106	C4	D136	H5	D166	F6
D17	B2	D47	G3	D77	F3	D107	D4	D137	B5	D167	G6
D18	C2	D48	H3	D78	F3	D108	E4	D138	C5	D168	H6
D19	D2	D49	B3	D79	G3	D109	F4	D139	D5		
D20	E2	D50	C3	D80	H3	D110	F4	D140	E5	*:B SIDE	
D21	F2	D51	D3	D81	B4	D111	G4	D141	F5		
D22	F2	D52	E3	D82	C4	D112	H4	D142	F5		
D23	G2	D53	F3	D83	D4	D113	B4	D143	G5		
D24	H2	D54	F3	D84	E4	D114	C4	D144	H5		
D25	B2	D55	G3	D85	F4	D115	D4	D145	B5		
D26	C2	D56	H3	D86	F4	D116	E4	D146	C5		
D27	D2	D57	B3	D87	G4	D117	F4	D147	D5		
D28	E2	D58	C3	D88	H4	D118	F4	D148	E5		

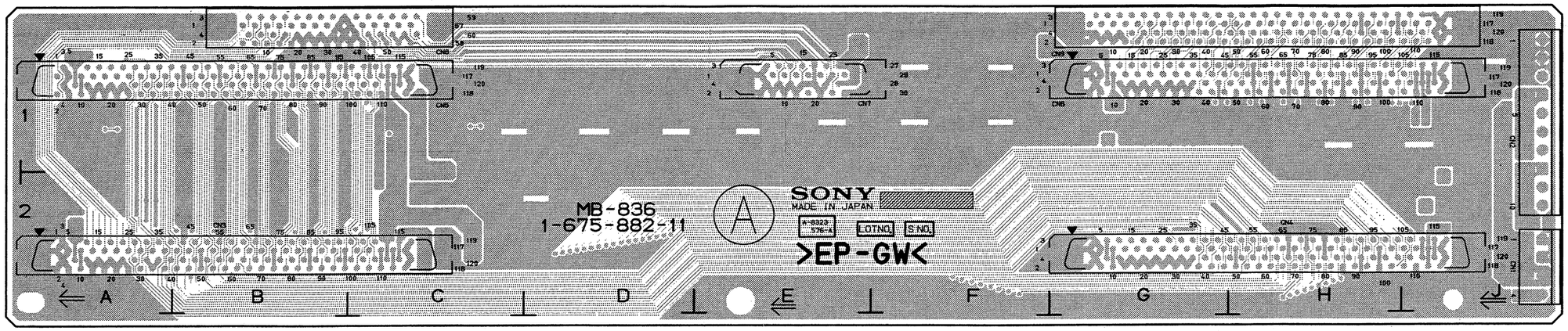

MB-836 -A SIDE-
SUFFIX: -11

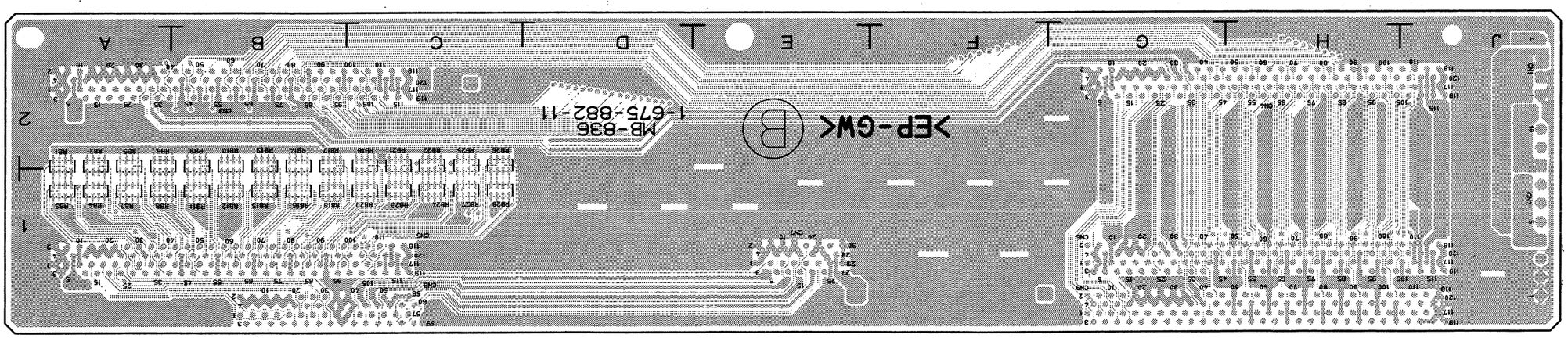

MB-836 -B SIDE-
SUFFIX: -11

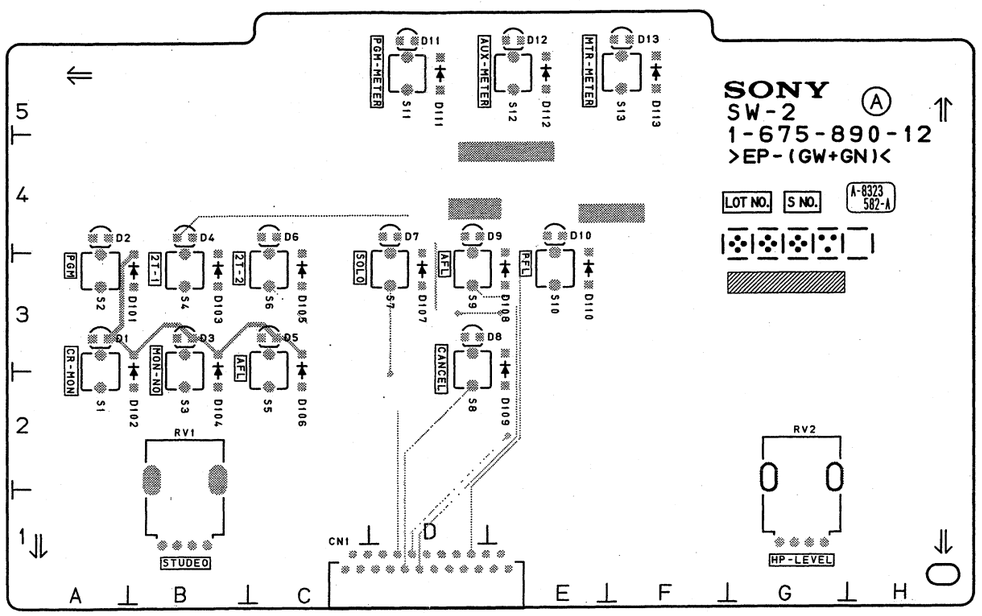

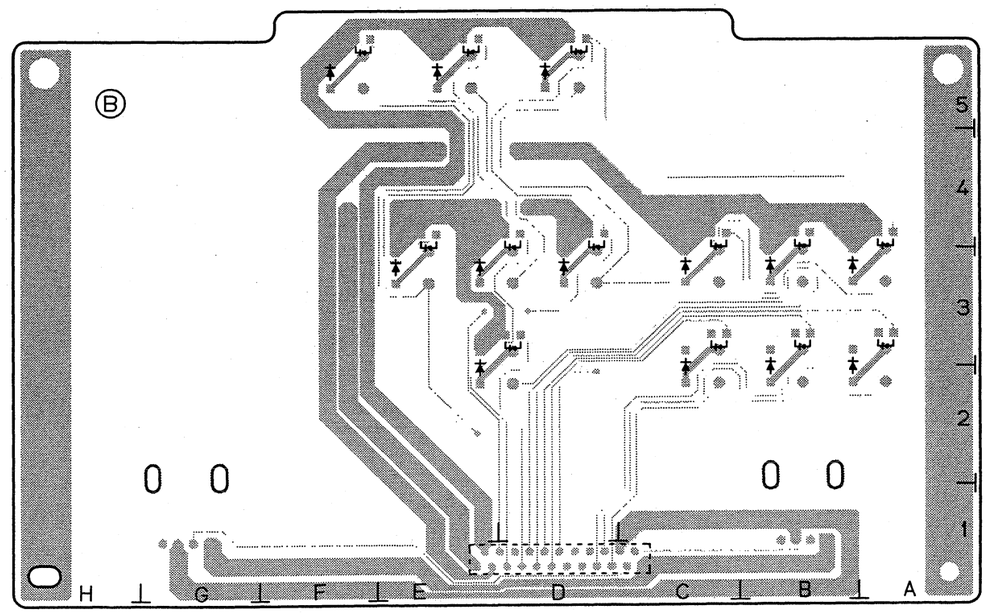

SW-2 -A SIDE-
SUFFIX: -12

SW-2 -B SIDE-
SUFFIX: -12

SW-2 (1-675-890-12)			
CN1	D1	S3	B2
		S4	B3
D1	A3	S5	C2
D2	A4	S6	C3
D3	B3	S7	D3
D4	B4	S8	D2
D5	C3	S9	D3
D6	C4	S10	E3
D7	D4	S11	D5
D8	D3	S12	E5
D9	D4	S13	F5
D10	E4		
D11	D5		
D12	E5		
D13	F5		
D101	B3		
D102	B2		
D103	B3		
D104	B2		
D105	C3		
D106	C2		
D107	D3		
D108	E3		
D109	E2		
D110	E3		
D111	D5		
D112	E5		
D113	F5		
RV1	B1		
RV2	G1		
S1	A2		
S2	A3		

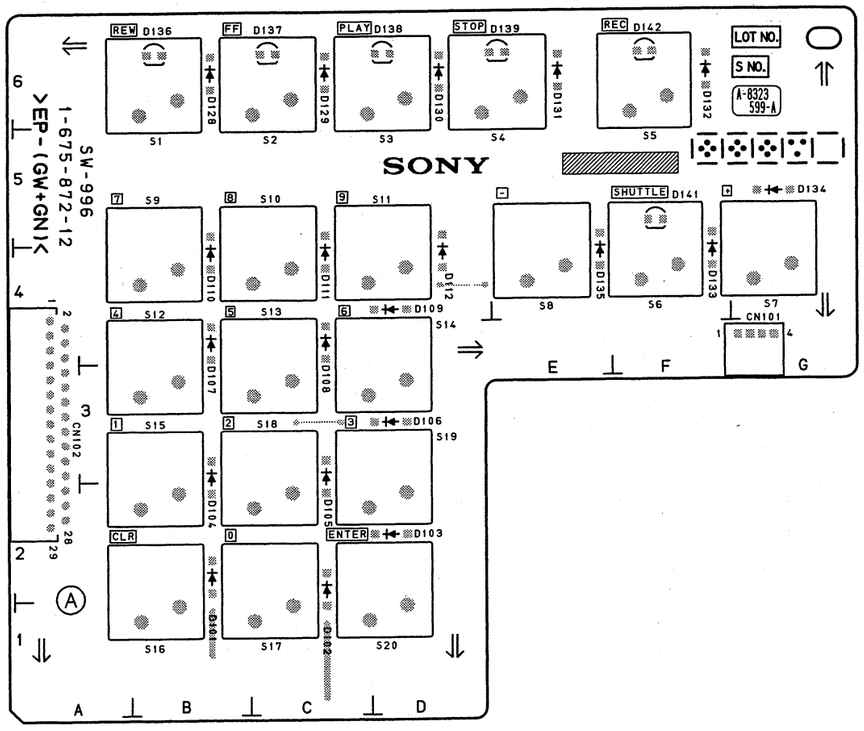

SW-996 -A SIDE-
SUFFIX: -12

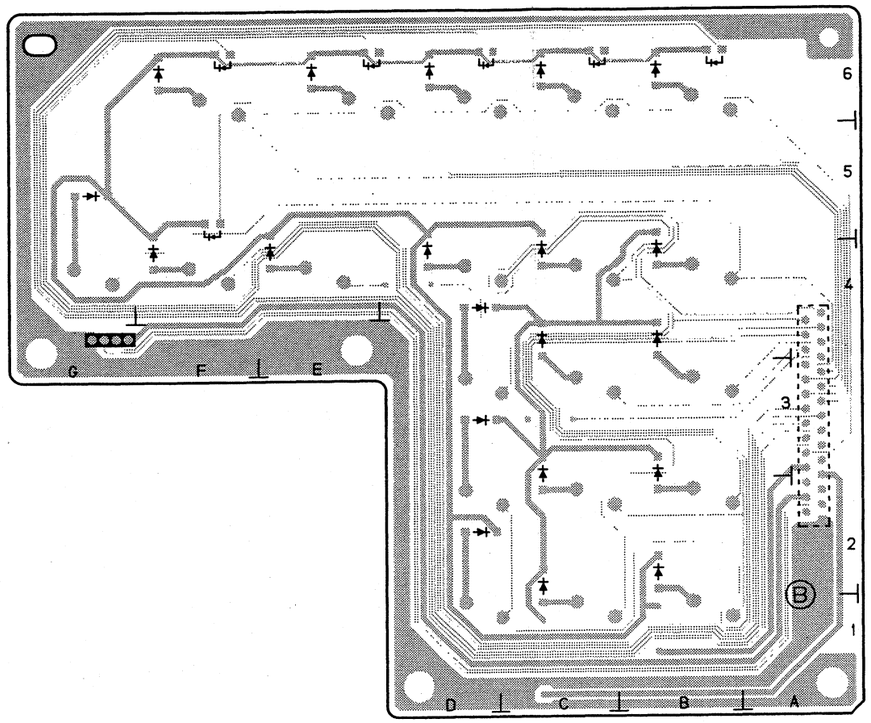

SW-996 -B SIDE-
SUFFIX: -12

SW-996 (1-675-872-12)

CN101	G4	D139	E6
CN102	A3	D141	F5
		D142	F6
D101	B2		
D102	C2	S1	B6
D103	D2	S2	C6
D104	B3	S3	D6
D105	C3	S4	E6
D106	D3	S5	F6
D107	B4	S6	F4
D108	C4	S7	G4
D109	D4	S8	E4
D110	B4	S9	B4
D111	C4	S10	C4
D112	D4	S11	D4
D128	B6	S12	B3
D129	C6	S13	C3
D130	D6	S14	D3
D131	E6	S15	B2
D132	F6	S16	B1
D133	F4	S17	C1
D134	G5	S18	C2
D135	E4	S19	D2
D136	B6	S20	D1
D137	C6		
D138	D6		

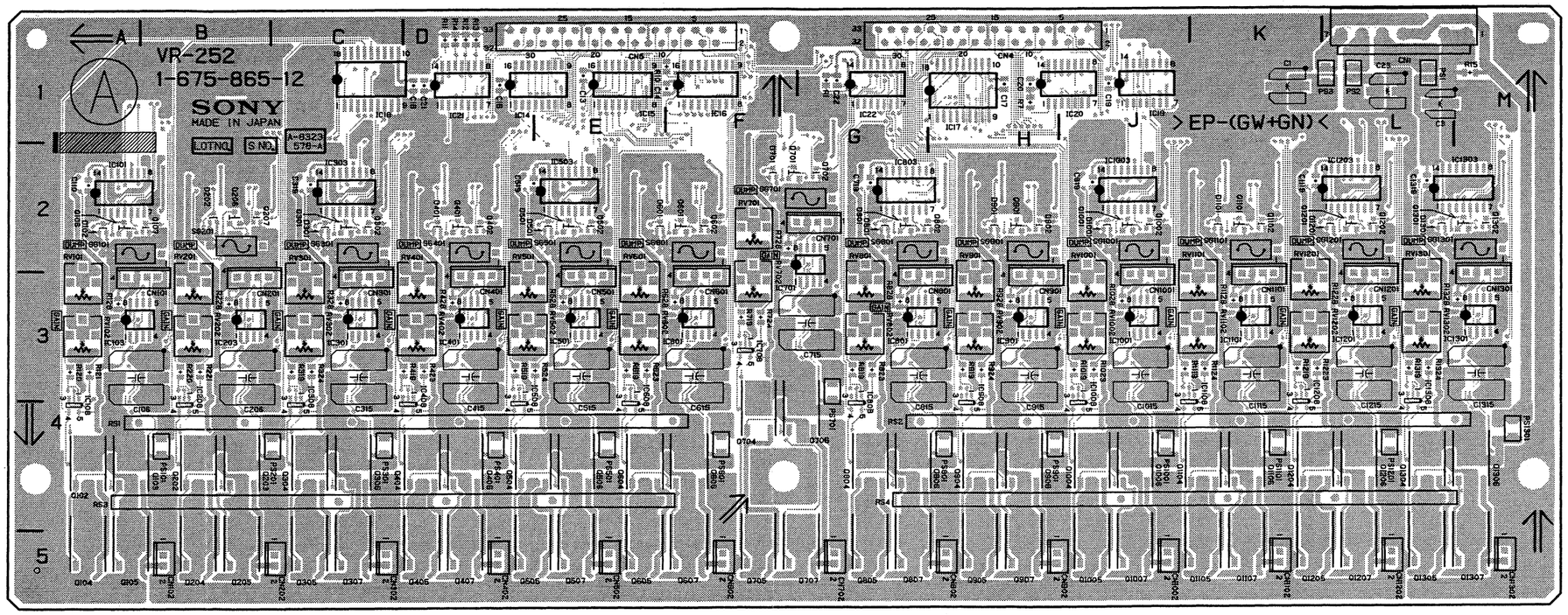

VR-252 -A SIDE-
SUFFIX: -12

VR-252 (1-675-865-12)

CN1	L1	D102	A2	IC17	H1	IC604	*F3	IC1301	M3	Q501	E2	Q1001	J2	RV302	C3
CN4	H1	D103	*A4	IC18	C1	IC607	*E4	IC1303	L2	Q502	E2	Q1002	J2	RV401	D3
CN5	E1	D202	B2	IC19	J1	IC608	E4	IC1304	*M3	Q504	D4	Q1004	J4	RV402	D3
CN101	B3	D203	*B4	IC20	H1	IC701	G3	IC1307	*L4	Q505	D5	Q1005	J5	RV501	D3
CN102	B5	D301	C2	IC21	D1	IC704	*G3	IC1308	L4	Q506	E4	Q1006	J4	RV502	D3
CN201	B3	D302	*C4	IC22	G1	IC707	*F4			Q507	E5	Q1007	J5	RV601	E3
CN202	C5	D401	D2	IC101	A2	IC708	F3	Q102	A4	Q601	F2	Q1101	K2	RV602	E3
CN301	C3	D402	*D4	IC103	A3	IC801	G3	Q103	A4	Q602	F2	Q1102	K2	RV701	F2
CN302	C5	D501	E2	IC105	*A3	IC803	G2	Q104	A5	Q604	E4	Q1104	K4	RV702	F3
CN401	D3	D502	*E4	IC107	*A4	IC804	*G3	Q105	A5	Q605	E5	Q1105	K5	RV801	G3
CN402	D5	D601	E2	IC108	A4	IC807	*G4	Q106	A2	Q606	F4	Q1106	K4	RV802	G3
CN501	E3	D602	*E4	IC203	B3	IC808	G4	Q107	B2	Q607	F5	Q1107	K5	RV901	H3
CN502	E5	D701	F2	IC205	*B3	IC901	H3	Q202	B4	Q701	F2	Q1201	L2	RV902	H3
CN601	F3	D702	*F3	IC207	*B4	IC904	*H3	Q203	B4	Q702	G2	Q1202	L2	RV1001	J3
CN602	F5	D801	G2	IC208	B4	IC907	*H4	Q204	B5	Q704	F4	Q1204	K4	RV1002	J3
CN701	G2	D802	*G4	IC301	C3	IC908	H4	Q205	B5	Q705	F5	Q1205	K5	RV1101	K3
CN702	G5	D901	H2	IC303	C2	IC1001	J3	Q206	B2	Q706	G4	Q1206	L4	RV1102	K3
CN801	G3	D902	*H4	IC304	*C3	IC1003	J2	Q207	B2	Q707	G5	Q1207	L5	RV1201	K3
CN802	H5	D1001	J2	IC305	*C4	IC1004	*J3	Q301	C2	Q801	G2	Q1301	M2	RV1202	K3
CN901	H3	D1002	*J4	IC308	C4	IC1007	*J4	Q302	C2	Q802	G2	Q1302	M2	RV1301	L3
CN902	H5	D1101	K2	IC401	D3	IC1008	J4	Q304	C4	Q804	G4	Q1304	L4	RV1302	L3
CN1001	J3	D1102	*K4	IC404	*D3	IC1101	K3	Q305	C5	Q805	G5	Q1305	L5		
CN1002	J5	D1201	L2	IC405	*D4	IC1104	*K3	Q306	C4	Q806	G4	Q1306	M4	*:B SIDE	
CN1101	K3	D1202	*K4	IC408	D4	IC1107	*K4	Q307	C5	Q807	G5	Q1307	M5		
CN1102	K5	D1301	L2	IC501	E3	IC1108	J4	Q401	D2	Q901	H2				
CN1201	L3	D1302	*L4	IC503	E2	IC1201	L3	Q402	D2	Q902	H2	RV101	A3		
CN1202	L5			IC504	*E3	IC1203	L2	Q404	D4	Q904	H4	RV102	A3		
CN1301	M3	IC14	D1	IC507	*E4	IC1204	*L3	Q405	D5	Q905	H5	RV201	B3		
CN1302	M5	IC15	E1	IC508	D4	IC1207	*L4	Q406	D4	Q906	H4	RV202	B3		
		IC16	F1	IC601	F3	IC1208	K4	Q407	D5	Q907	H5	RV301	C3		

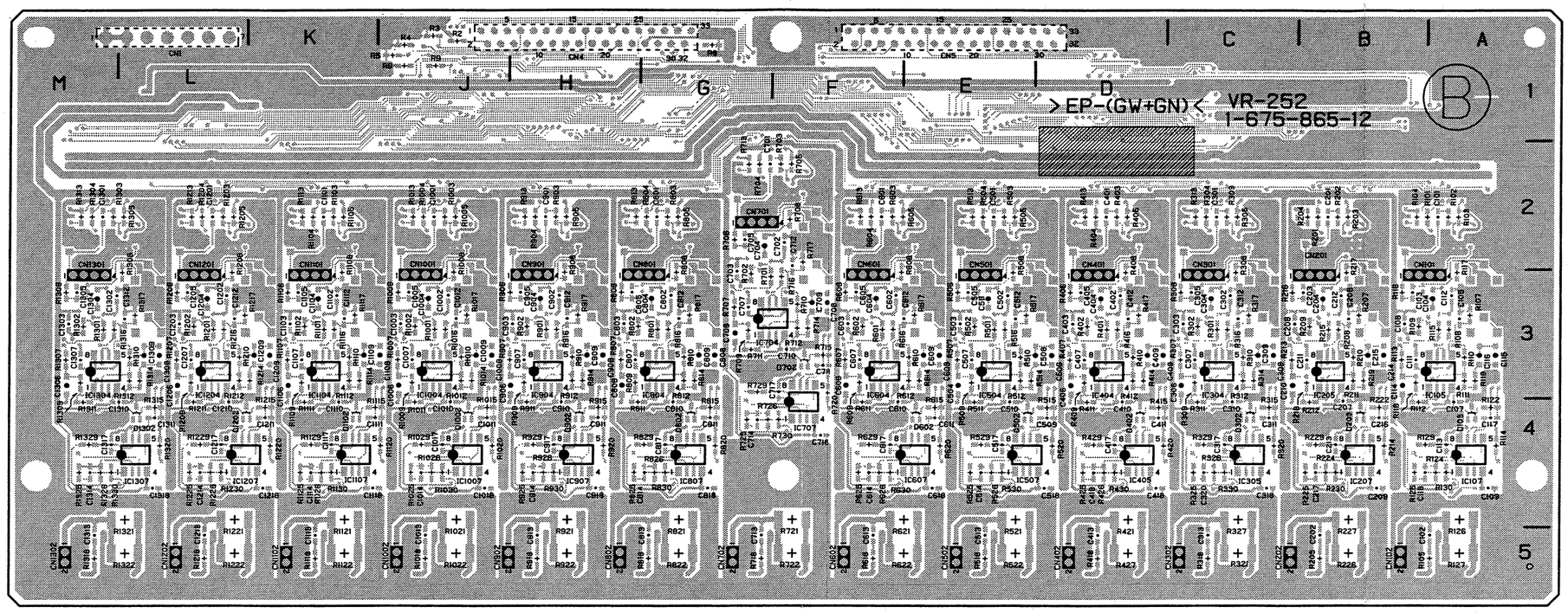

VR-252 -B SIDE-
SUFFIX: -12

SONY-SP1439 / DRUCK 41

7-2. DMBK-R101

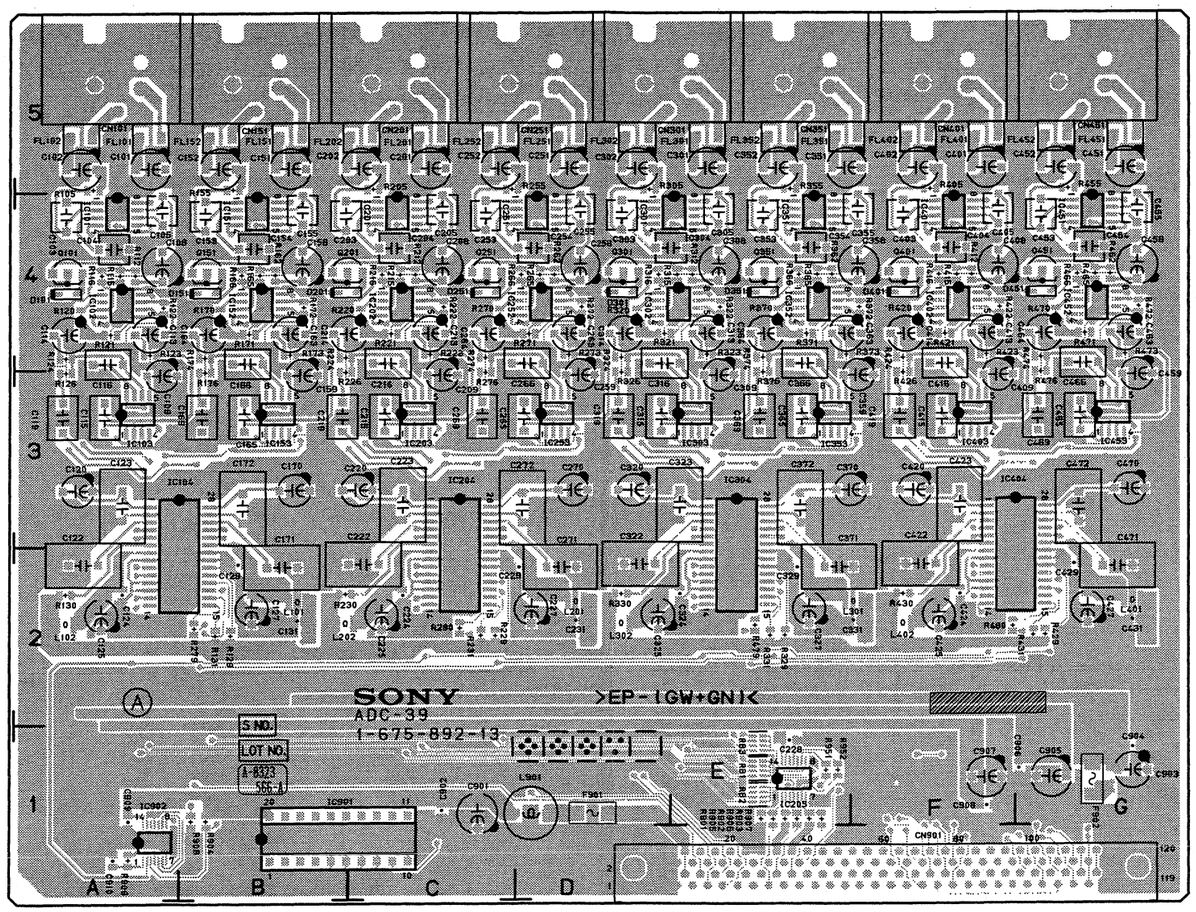

ADC-39 -A SIDE-
SUFFIX: -13

ADC-39 (1-675-892-13)

CN101	A5
CN151	B5
CN201	C5
CN251	D5
CN301	D5
CN351	E5
CN401	F5
CN451	G5
CN901	F1
D101	A4
D151	B4
D201	B4
D251	C4
D301	D4
D351	E4
D401	F4
D451	G4
F901	D1
F902	G1
IC101	A4
IC102	A4
IC103	A3
IC104	A3
IC151	B4
IC152	B4
IC153	B3
IC201	C4
IC202	C4
IC203	C3
IC204	C3
IC205	E1
IC251	C4
IC252	D4
IC253	D3
IC301	D4
IC302	D4
IC303	E3
IC304	E3
IC351	E4
IC352	E4
IC353	E3
IC401	F4
IC402	F4
IC403	F3
IC404	F3
IC451	G4
IC452	G4
IC453	G3
IC901	B1
IC902	A1
Q101	A4
Q151	B4
Q201	B4
Q251	C4
Q301	D4
Q351	E4
Q401	F4
Q451	G4

SONY-SP1439 / DRUCK 42

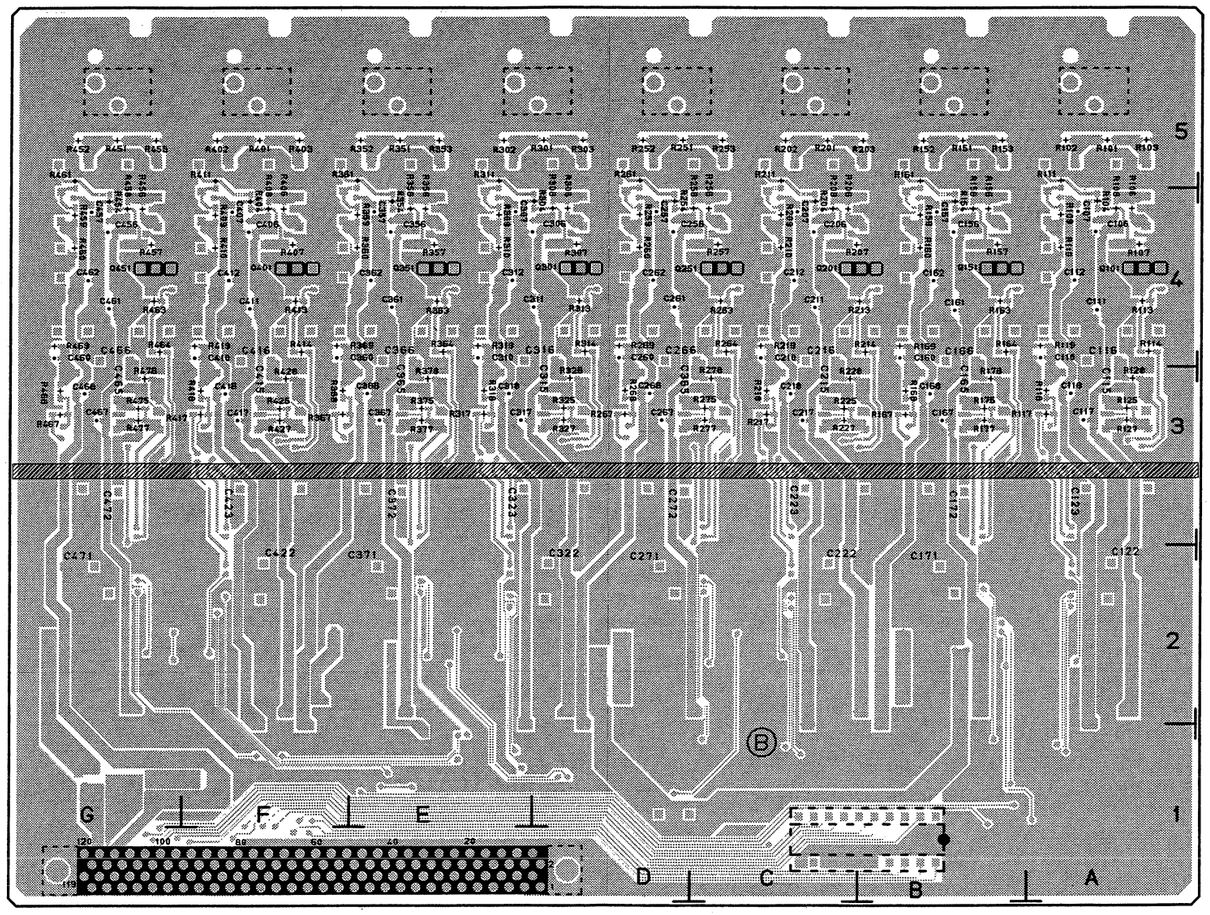

ADC-39 -B SIDE-
SUFFIX: -13

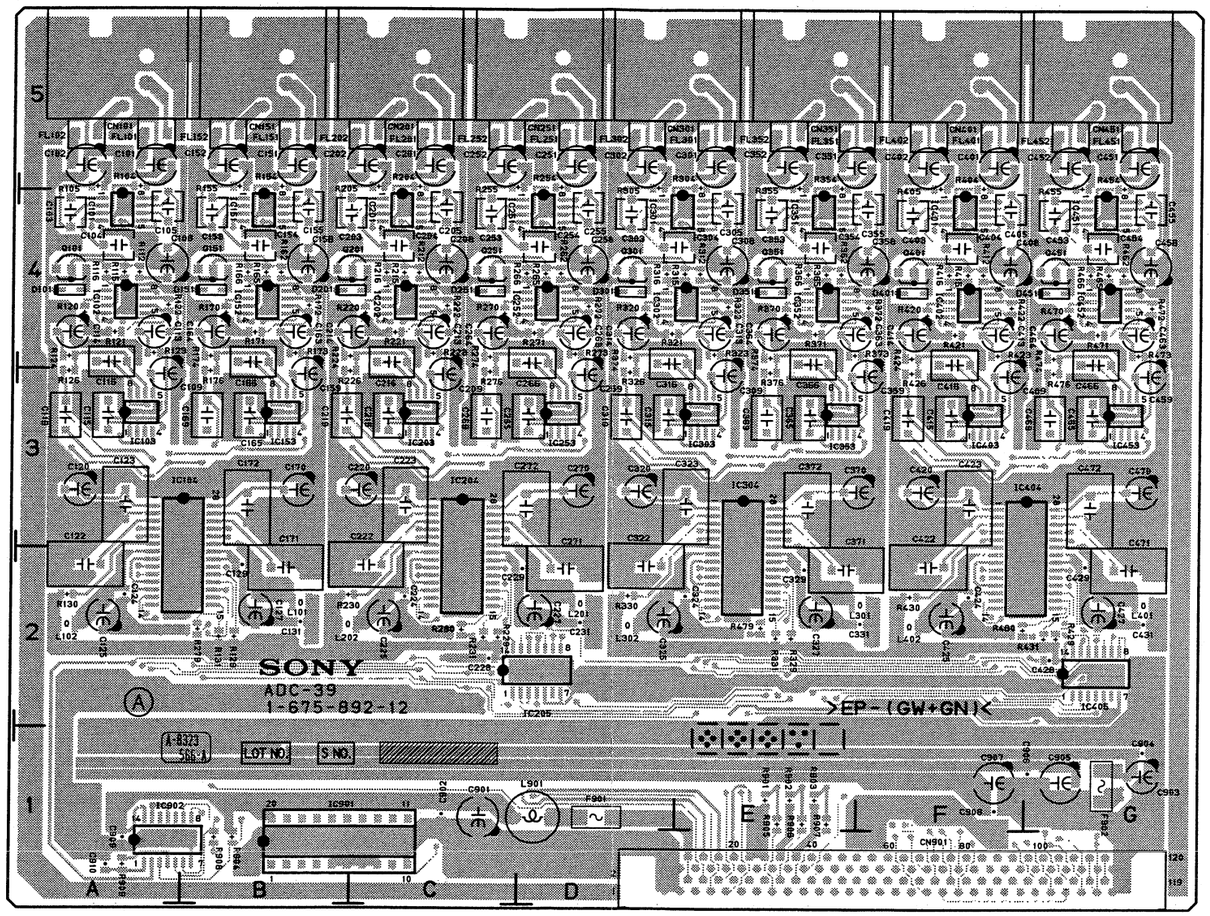

ADC-39 -A SIDE-
SUFFIX: -12

ADC-39 (1-675-892-12)

CN101	A5
CN151	B5
CN201	C5
CN251	D5
CN301	D5
CN351	E5
CN401	F5
CN451	G5
CN901	F1
D101	A4
D151	B4
D201	B4
D251	C4
D301	D4
D351	E4
D401	F4
D451	G4
F901	D1
F902	G1
IC101	A4
IC102	A4
IC103	A3
IC104	A3
IC151	B4
IC152	B4
IC153	B3
IC201	C4
IC202	C4
IC203	C3
IC204	C3
IC205	C2
IC251	C4
IC252	D4
IC253	D3
IC301	D4
IC302	D4
IC303	E3
IC304	E3
IC351	E4
IC352	E4
IC353	E3
IC401	F4
IC402	F4
IC403	F3
IC404	F3
IC405	G2
IC451	G4
IC452	G4
IC453	G3
IC901	B1
IC902	A1
Q101	A4
Q151	B4
Q201	B4
Q251	C4
Q301	D4
Q351	E4
Q401	F4
Q451	G4

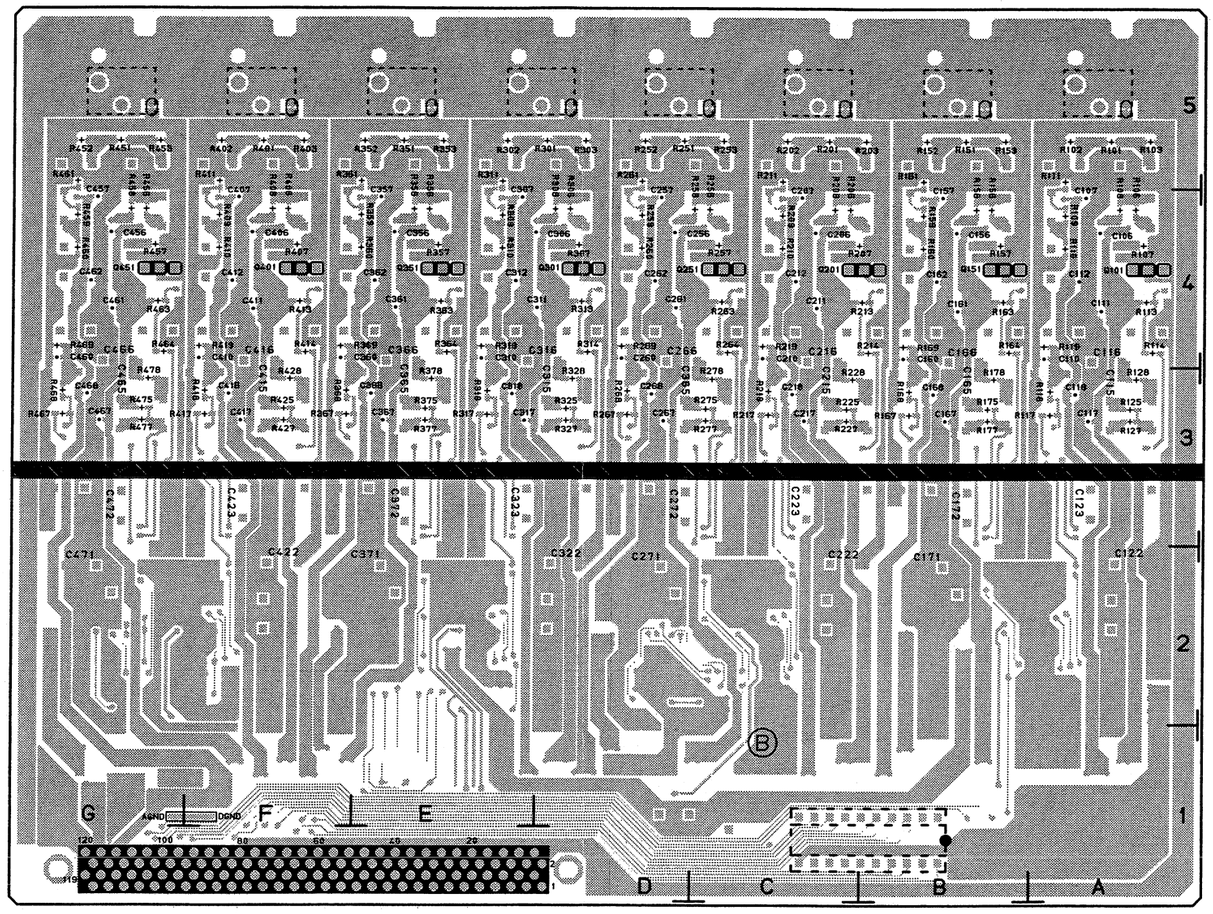

ADC-39 -B SIDE-
SUFFIX: -12

7-3. DMBK-R102

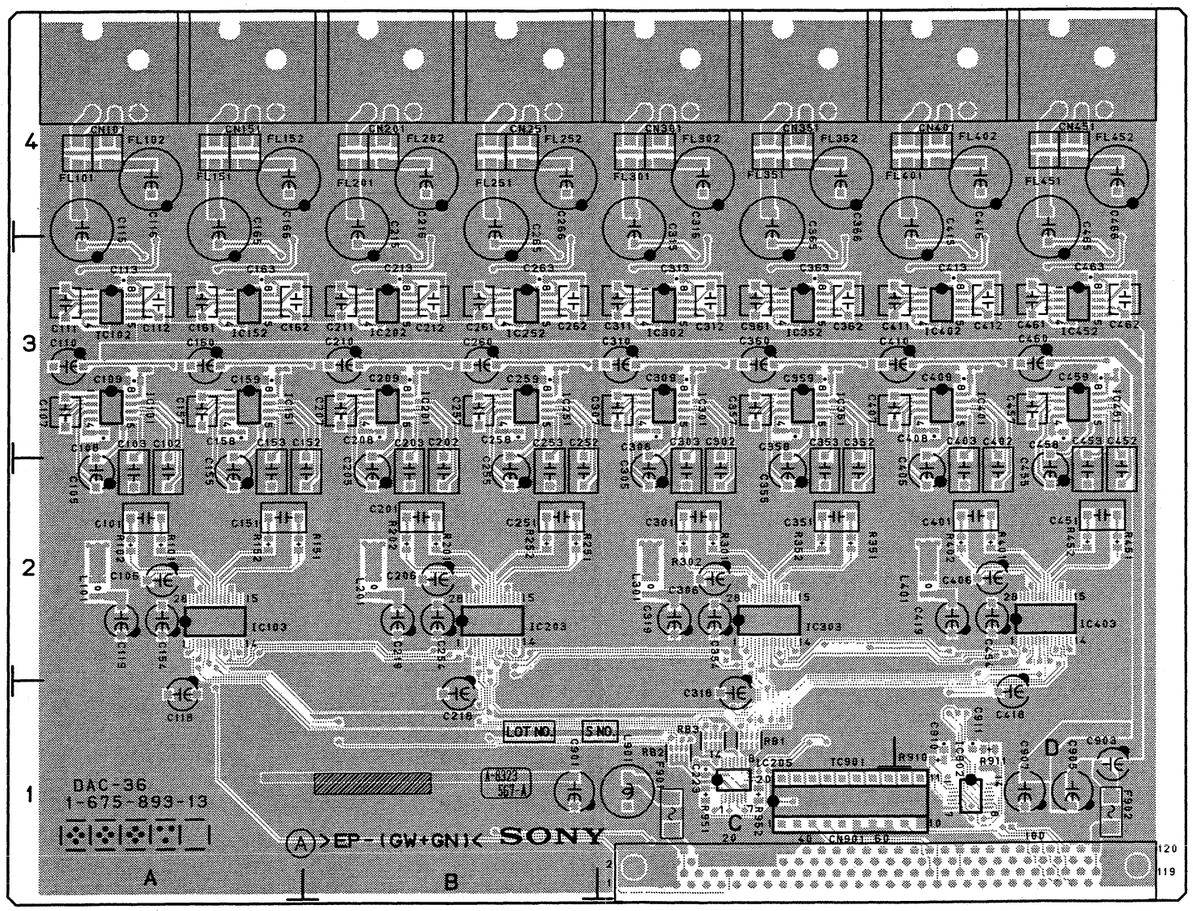

DAC-36 (1-675-893-13)

CN101	A4
CN151	A4
CN201	B4
CN251	B4
CN301	C4
CN351	C4
CN401	D4
CN451	D4
CN901	C1
F901	C1
F902	D1
IC101	A3
IC102	A3
IC103	A2
IC151	A3
IC152	A3
IC201	B3
IC202	B3
IC203	B2
IC205	C1
IC251	B3
IC252	B3
IC301	C3
IC302	C3
IC303	C2
IC351	C3
IC352	C3
IC401	D3
IC402	D3
IC403	D2
IC451	D3
IC452	D3
IC901	C1
IC902	D1

DAC-36 -A SIDE-
SUFFIX: -13

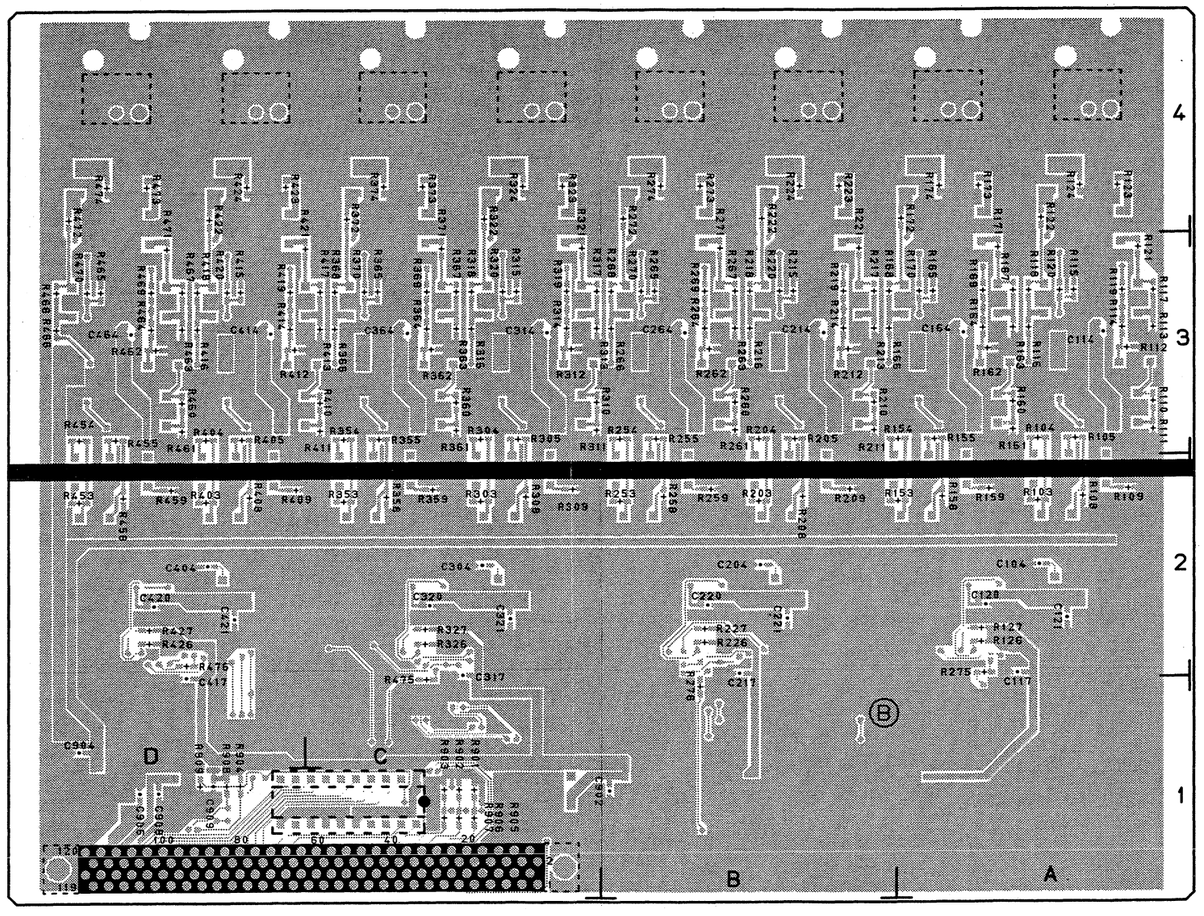

DAC-36 -B SIDE-
SUFFIX: -13

7-4. DMBK-R103

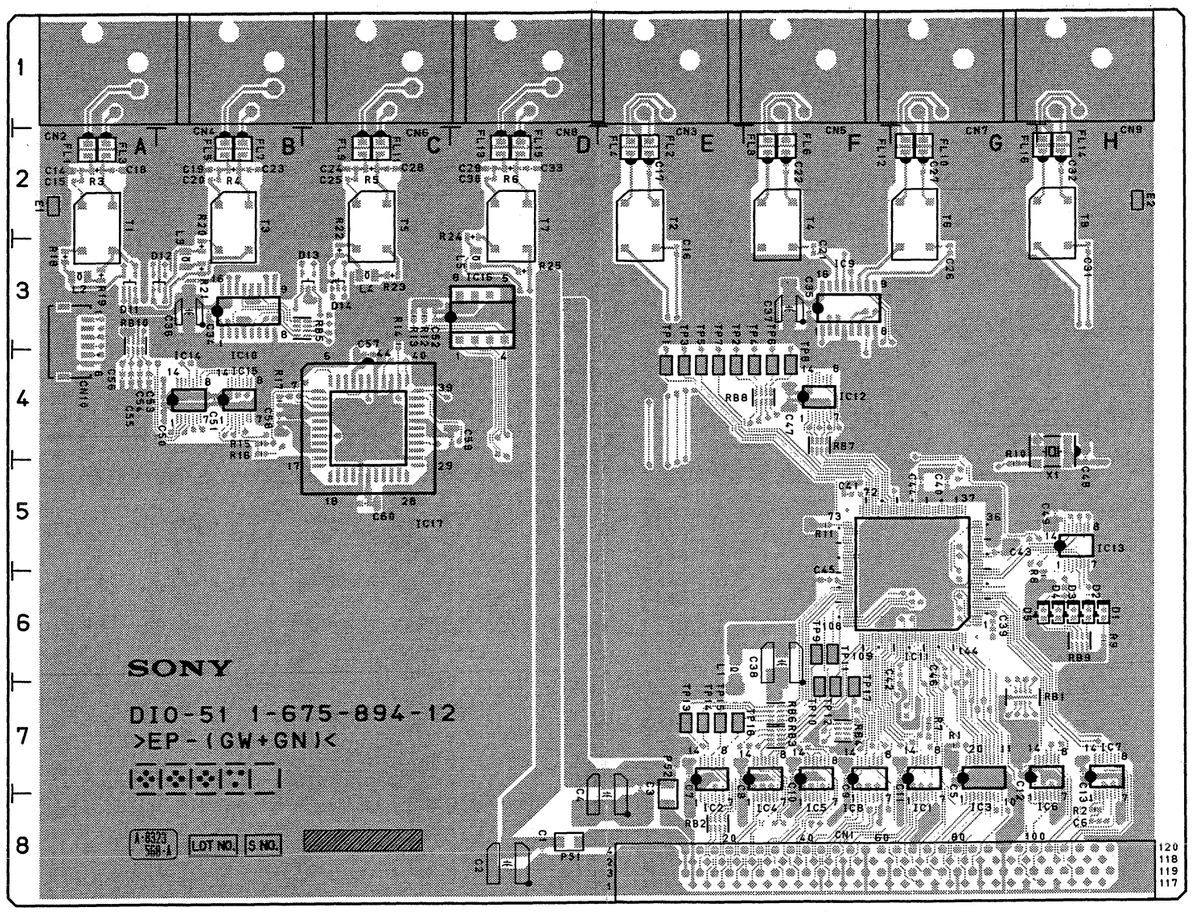

DIO-51 -A SIDE-
SUFFIX: -12

DIO-51 (1-675-894-12)

CN1	F8
CN2	A1
CN3	E1
CN4	B1
CN5	F1
CN6	C1
CN7	G1
CN8	D1
CN9	H1
CN10	A3
D1	H6
D2	H6
D3	H6
D4	H6
D5	H6
D11	A3
D12	B3
D13	C3
D14	C3
E1	A2
E2	H2
IC1	G8
IC2	E8
IC3	G8
IC4	F8
IC5	F8
IC6	G8
IC7	H8
IC8	F8
IC9	F3
IC10	B3
IC11	G6
IC12	F4
IC13	H5
IC14	B4
IC15	B4
IC16	D3
IC17	C4
TP1	E4
TP2	E4
TP3	E4
TP4	F4
TP5	E4
TP6	F4
TP7	E4
TP8	F4
TP9	F6
TP10	F7
TP11	F6
TP12	F7
TP13	E7
TP14	E7
TP15	E7
TP16	E7
TP17	F7
X1	H4

7-5. DMBK-R104

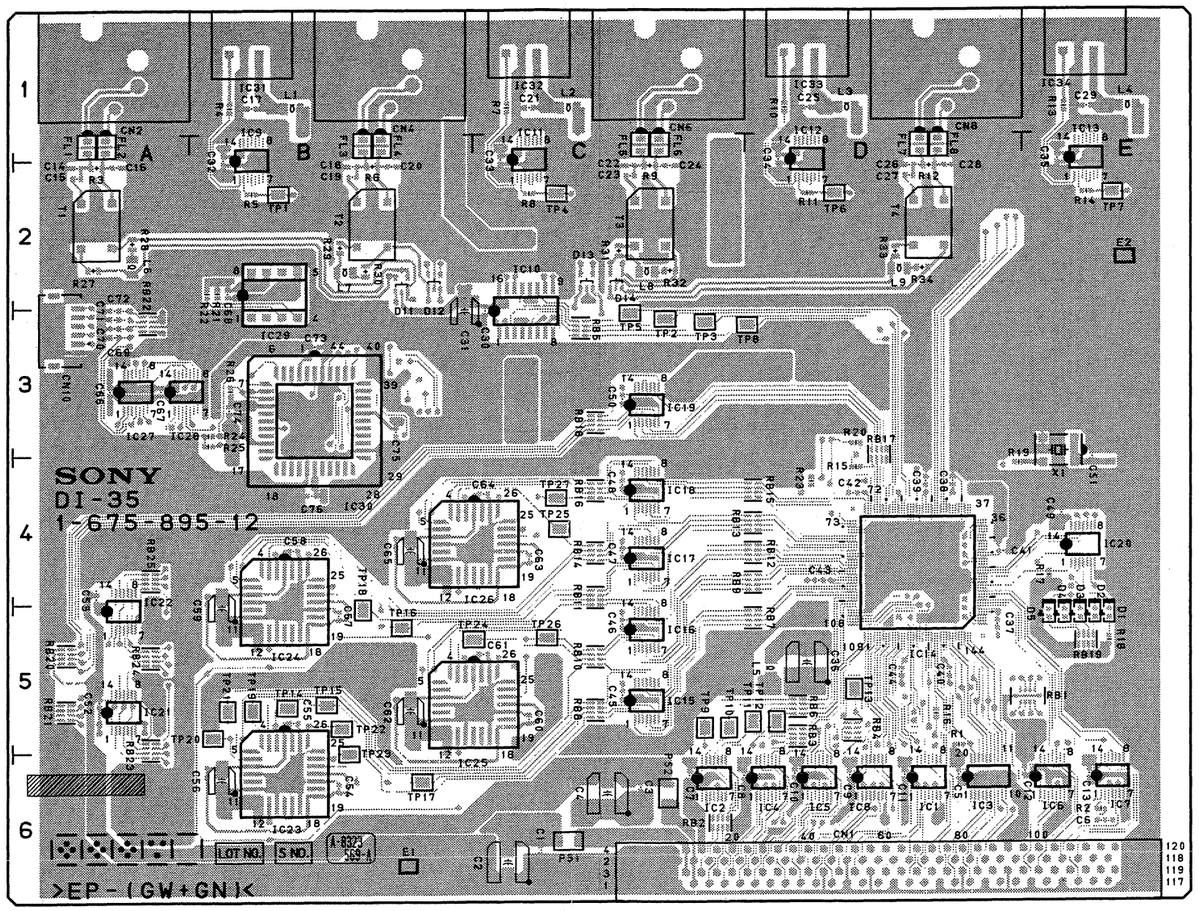

DI-35 -A SIDE-
SUFFIX: -12

DI-35 (1-675-895-12)

CN1	D6
CN2	A1
CN4	B1
CN6	C1
CN8	D1
CN10	A3
D1	E5
D2	E5
D3	E5
D4	E5
D5	E5
D11	B2
D12	B2
D13	C2
D14	C2
E1	B6
E2	E2
IC1	D6
IC2	C6
IC3	D6
IC4	D6
IC5	D6
IC6	E6
IC7	E6
IC8	D6
IC9	B2
IC10	C3
IC11	C2
IC12	D2
IC13	E2
IC14	D4
IC15	C5
IC16	C5
IC17	C4
IC18	C4
IC19	C3
IC20	E4
IC21	A5
IC22	A5
IC23	B6
IC24	B4
IC25	C5
IC26	C4
IC27	A3
IC28	A3
IC29	B3
IC30	B3
IC31	B1
IC32	C1
IC33	D1
IC34	E1
TP1	B2
TP2	C3
TP3	C3
TP4	C2
TP5	C3
TP6	D2
TP7	E2
TP8	D3
TP9	C5
TP10	C5
TP11	D5
TP12	D5
TP13	D5
TP14	B5
TP15	B5
TP16	B5
TP17	B6
TP18	B5
TP19	B5
TP20	B5
TP21	B5
TP22	B5
TP23	B6
TP24	C5
TP25	C4
TP26	C5
TP27	C4
X1	E3

7-6. DMBK-R105

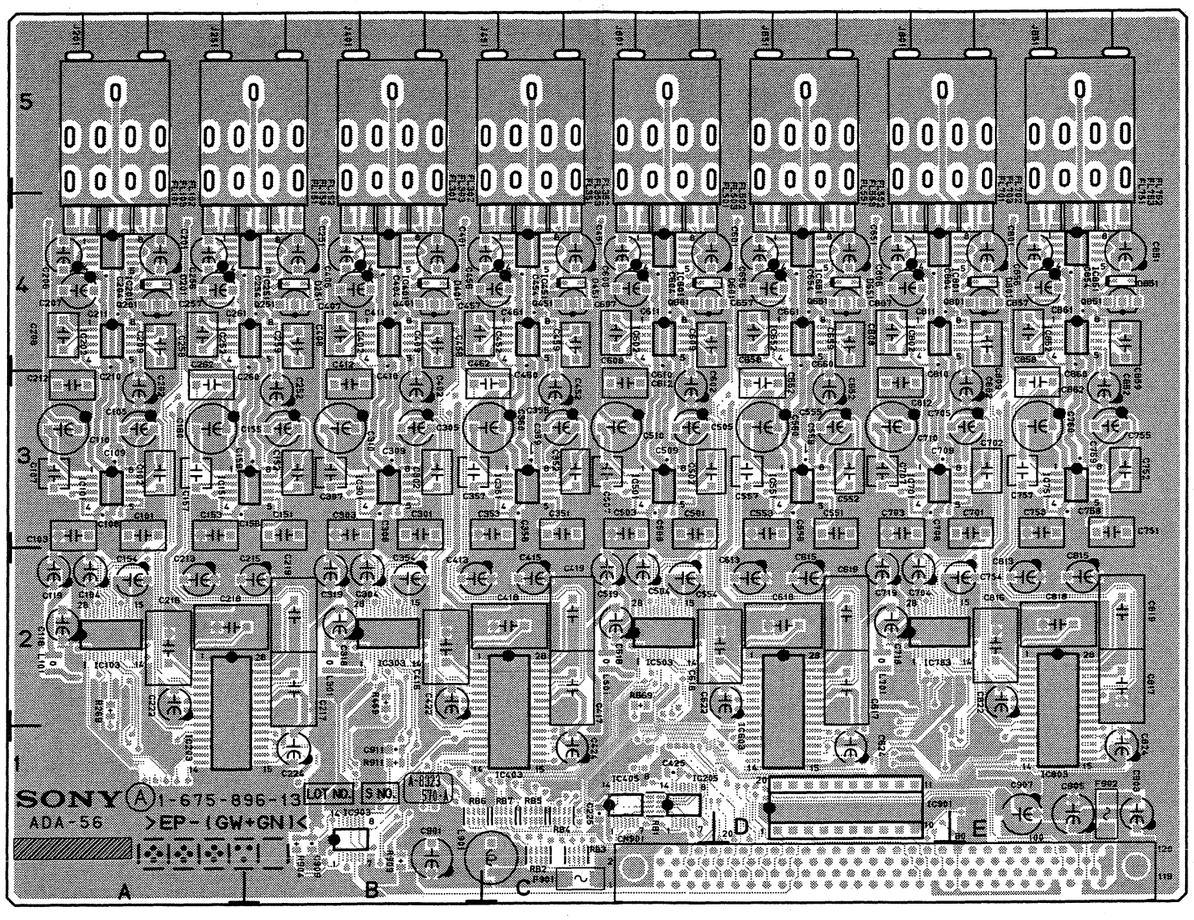

ADA-56 -A SIDE-
SUFFIX: -13

ADA-56 (1-675-896-13)

CN901	D1
D201	A4
D251	B4
D401	B4
D451	C4
D601	C4
D651	D4
D801	E4
D851	E4
F901	C1
F902	E1
IC101	A3
IC103	A2
IC151	A3
IC201	A4
IC202	A4
IC203	A2
IC205	C1
IC251	A4
IC252	A4
IC301	B3
IC303	B2
IC351	C3
IC401	B4
IC402	B4
IC403	B2
IC405	C1
IC451	C4
IC452	C4
IC501	C3
IC503	C2
IC551	D3
IC601	C4
IC602	C4
IC603	D2
IC651	D4
IC652	D4
IC701	D3
IC703	D2
IC751	E3
IC801	D4
IC802	D4
IC803	E2
IC851	E4
IC852	E4
IC901	D1
IC903	B1
Q201	A4
Q251	B4
Q401	B4
Q451	C4
Q601	C4
Q651	D4
Q801	E4
Q851	E4

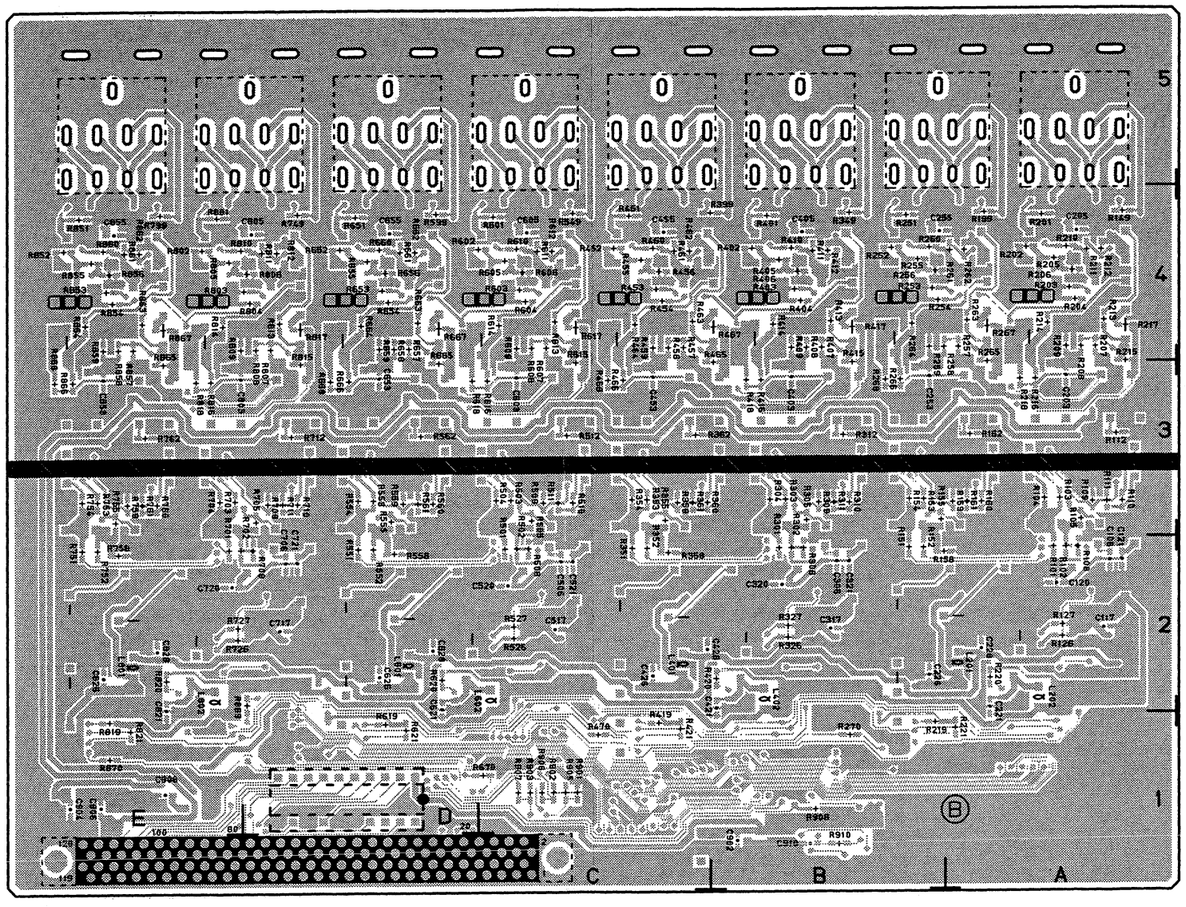

ADA-56 -B SIDE-
SUFFIX: -13

7-7. DMBK-R106

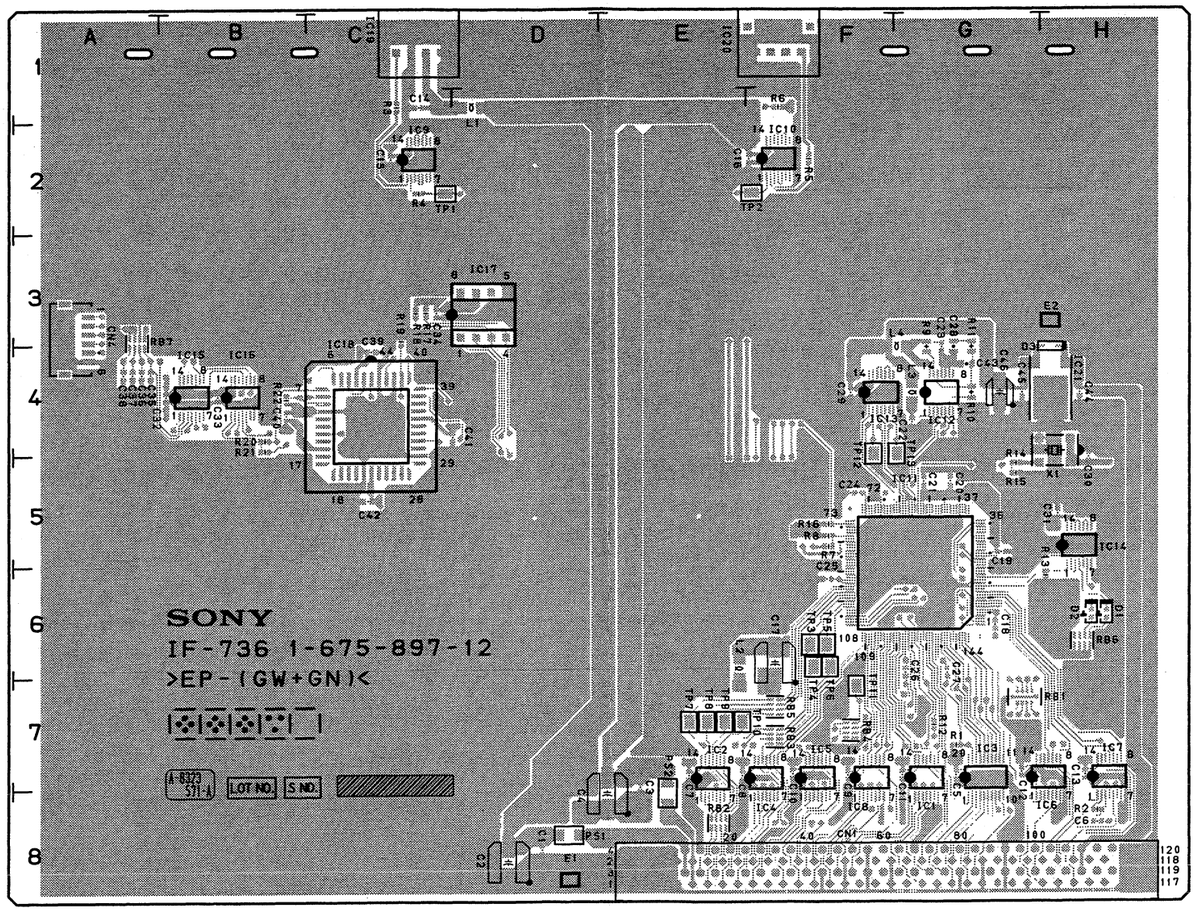

IF-736 -A SIDE-
SUFFIX: -12

IF-736 (1-675-897-12)

CN1	F8
CN4	A3
D1	H6
D2	H6
D3	H4
E1	D8
E2	H3
IC1	G8
IC2	E8
IC3	G8
IC4	F8
IC5	F8
IC6	G8
IC7	H8
IC8	F8
IC9	C2
IC10	F2
IC11	G6
IC12	G4
IC13	F4
IC14	H5
IC15	B4
IC16	B4
IC17	D3
IC18	C4
IC19	C1
IC20	F1
IC21	H4
TP1	C2
TP2	F2
TP3	F6
TP4	F6
TP5	F6
TP6	F6
TP7	E7
TP8	E7
TP9	E7
TP10	E7
TP11	F7
TP12	F4
TP13	G4
X1	H4

7-8. DMBK-R107

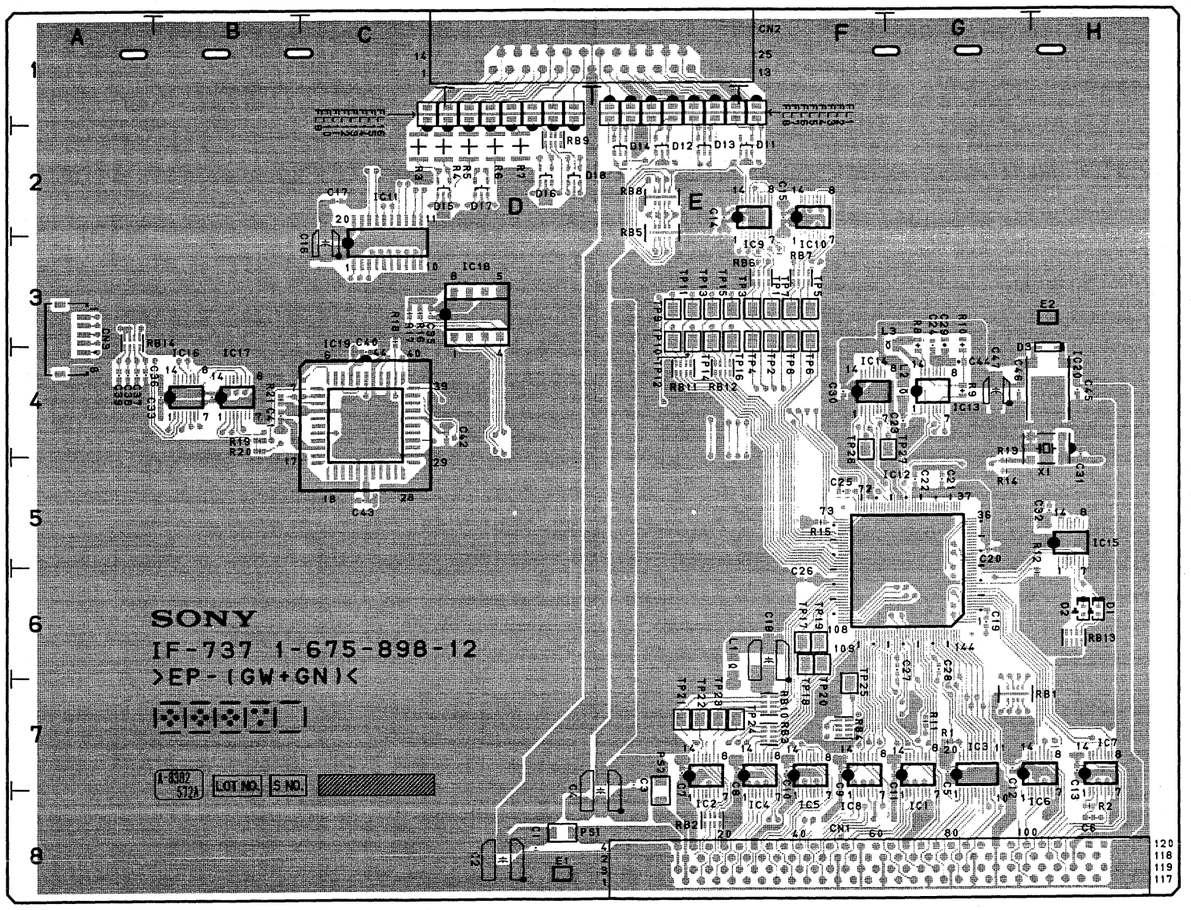

IF-737 -A SIDE-
SUFFIX: -12

IF-737 (1-675-898-12)

CN1	F8
CN2	D1
CN3	A3
D1	H6
D2	H6
D3	H4
D11	F2
D12	E2
D13	E2
D14	E2
D15	C2
D16	D2
D17	D2
D18	D2
E1	D8
E2	H3
IC1	G8
IC2	E8
IC3	G8
IC4	F8
IC5	F8
IC6	G8
IC7	H8
IC8	F8
IC9	F3
IC10	F3
IC11	C3
IC12	G6
IC13	G4
IC14	F4
IC15	H5
IC16	B4
IC17	B4
IC18	D3
IC19	C4
IC20	H4
TP1	F3
TP2	F3
TP3	F3
TP4	F3
TP5	F3
TP6	F3
TP7	F3
TP8	F3
TP9	E3
TP10	E3
TP11	E3
TP12	E3
TP13	E3
TP14	E3
TP15	E3
TP16	E3
TP17	F6
TP18	F6
TP19	F6
TP20	F6
TP21	E7
TP22	E7
TP23	E7
TP24	E7
TP25	F7
TP26	F4
TP27	G4
X1	H4

Section 8
Schematic Diagrams

Index

DMX-R100

Board name	Circuit function	Page
AA-99	Analog audio	8-2
AA-101	Analog audio	8-4
AC-199 (for UC)	AC power	8-13
AC-199A (for CE)	AC power	8-13
AC-199B (for J)	AC power	8-13
AD-158	AD converter	8-8
ASW-57	Assign switch	8-13
CN-1771	Connector	8-14
CN-1772	Connector	8-15
CN-1788	Connector	8-16
CN-1789	Connector	8-17
CN-1941	Connector	8-55
CN-2062	Connector	8-95
CP-339	Control panel	8-18
CPU-284	CPU	8-20
DA-137	DA converter	8-29
DC-102	DC power	8-39
HP-94	Head phones	8-131
FP-116	Front panel	8-41
IF-735	Interface	8-42
LC-38	LCD control	8-54
LED-332	LED indicator	8-57
MB-836	Mother board	8-58
MIX-39	Mixing	8-62
MT-133	Meter	8-91
MT-133A	Meter	8-91
MT-134	Meter	8-92
SW-2	Switch	8-93
SW-996	Switch	8-94
TB-15	Talk back	8-95
VR-252	Volume	8-96
Frame wiring		8-130

DMBK-R101

Board name	Circuit function	Page
ADC-39	8 channel analog line input	8-104

DMBK-R102

Board name	Circuit function	Page
DAC-36	8 channel analog line output	8-107

DMBK-R103

Board name	Circuit function	Page
DIO-51	8 channel AES/EBU DIO	8-110

DMBK-R104

Board name	Circuit function	Page
DI-35	8 channel AES/EBU DI with SRC	8-114

DMBK-R105

Board name	Circuit function	Page
ADA-56	8 channel analog I/O insertion	8-119

DMBK-R106

Board name	Circuit function	Page
IF-736	8 channel adat DIO	8-124

DMBK-R107

Board name	Circuit function	Page
IF-737	8 channel TDIF-1 DIO	8-126

SONY-SP1439 / DRUCK 55

8-1. DMX-R100

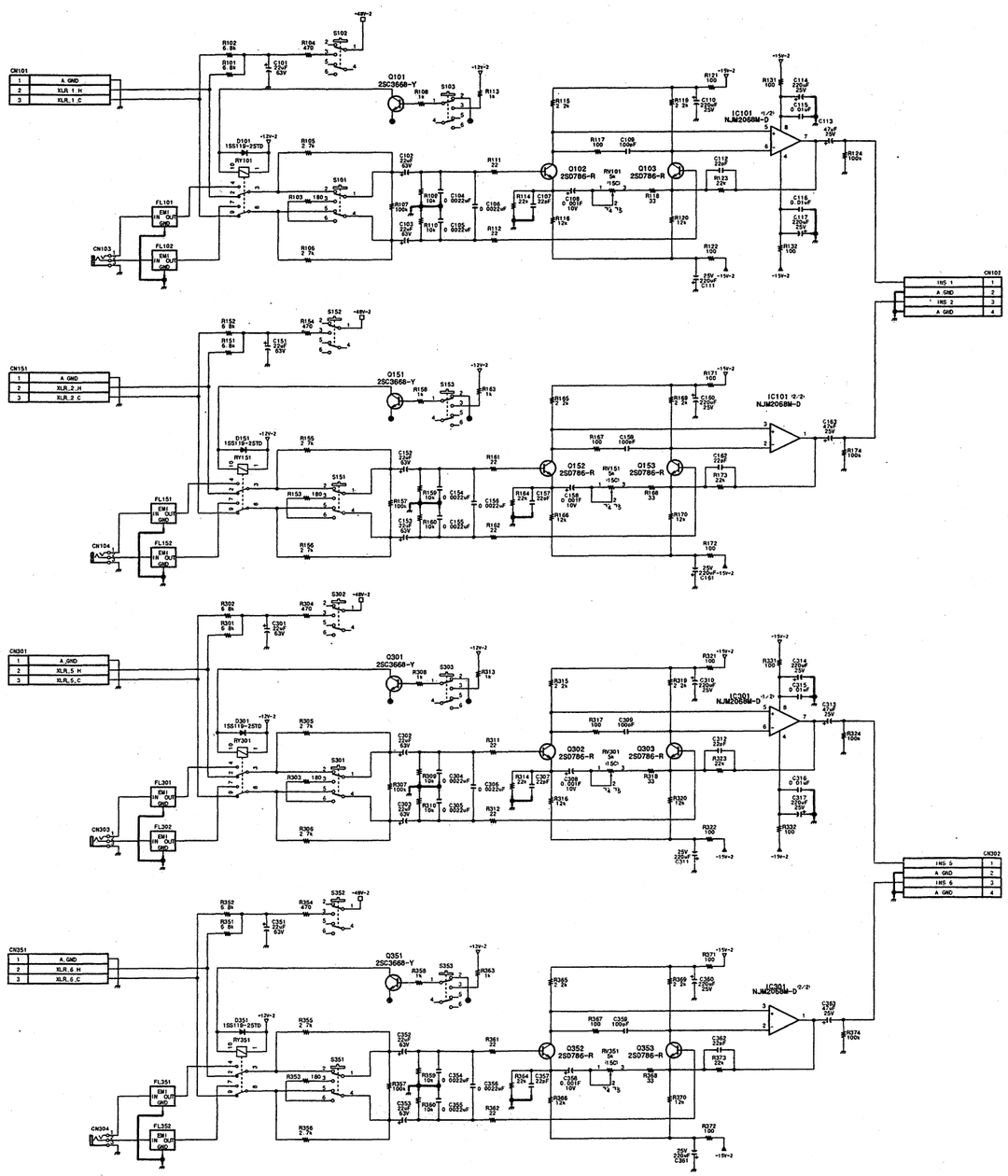

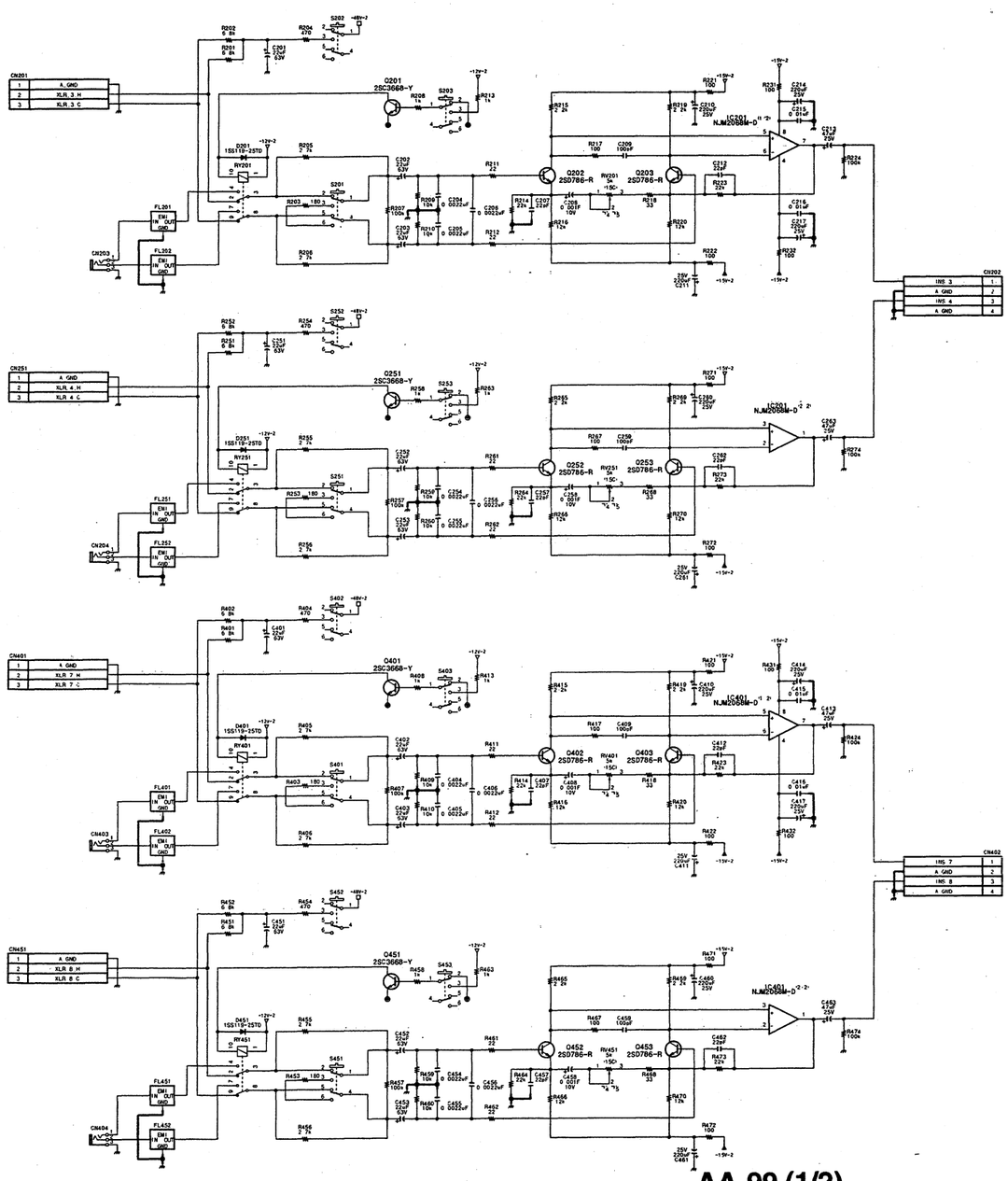

AA-99 (1/2)

BOARD NO. 1-675-876-12,-13

GS-APX-397_AA-99_001_001

GS-APX-397_AA-99_001_002

8-2 8-2

DMX-R100/V2

AA-99 (2/2)

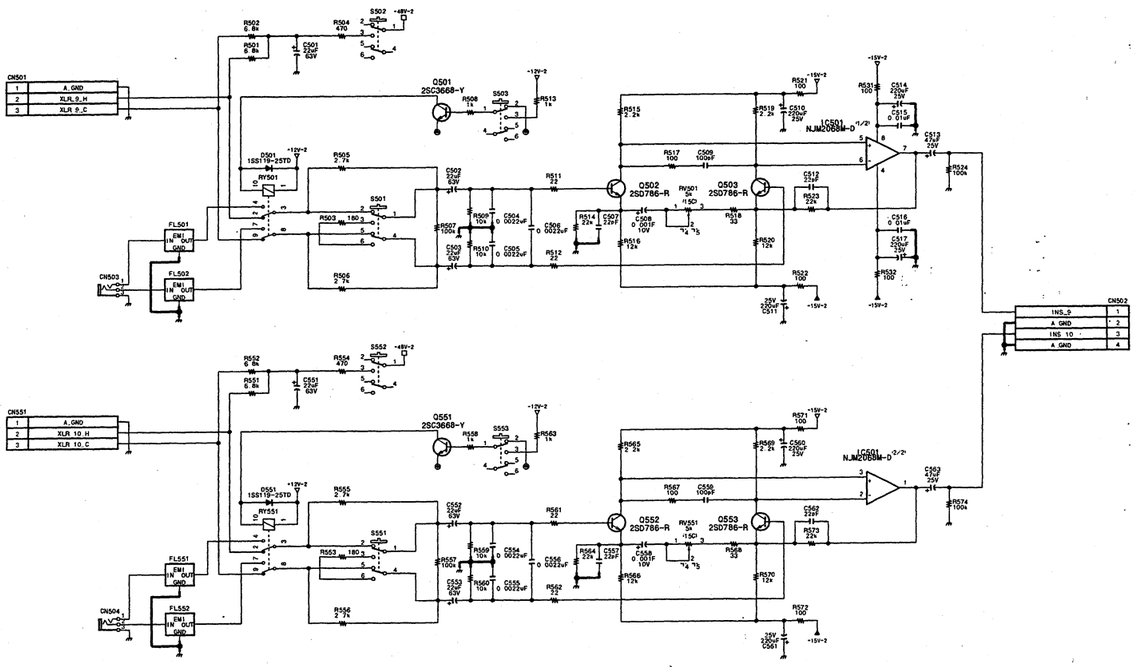

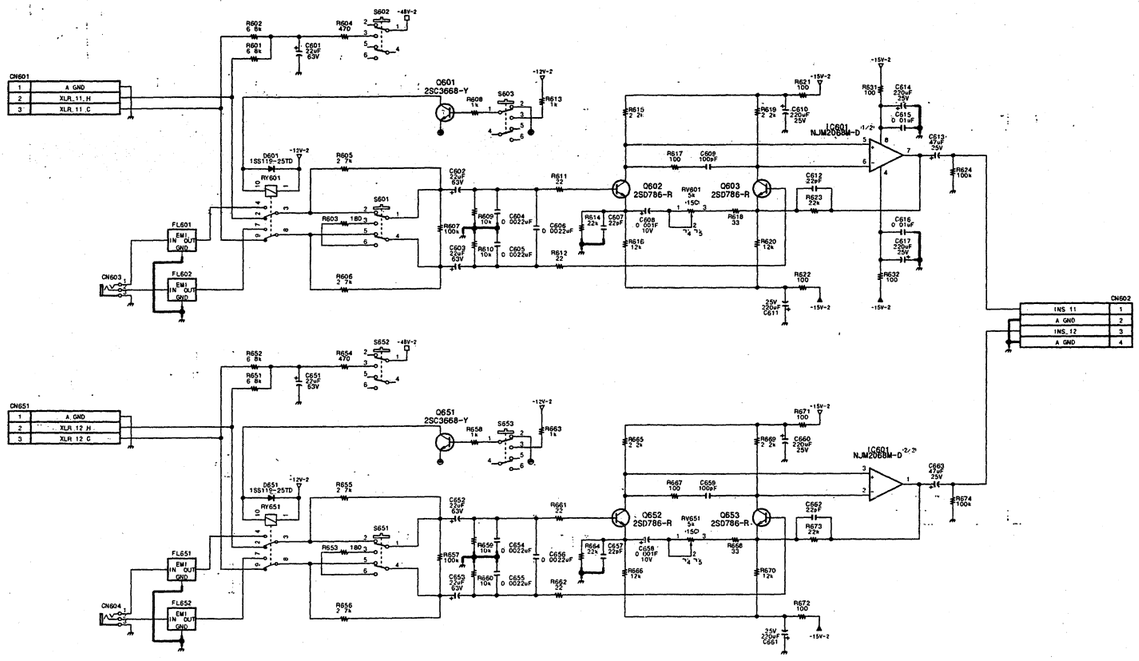

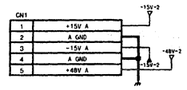

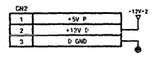

AA-99 (2/2)
BOARD NO. 1-675-876-12,-13
GS-APX-397_AA-99_001_003

AA-101 (1/4)

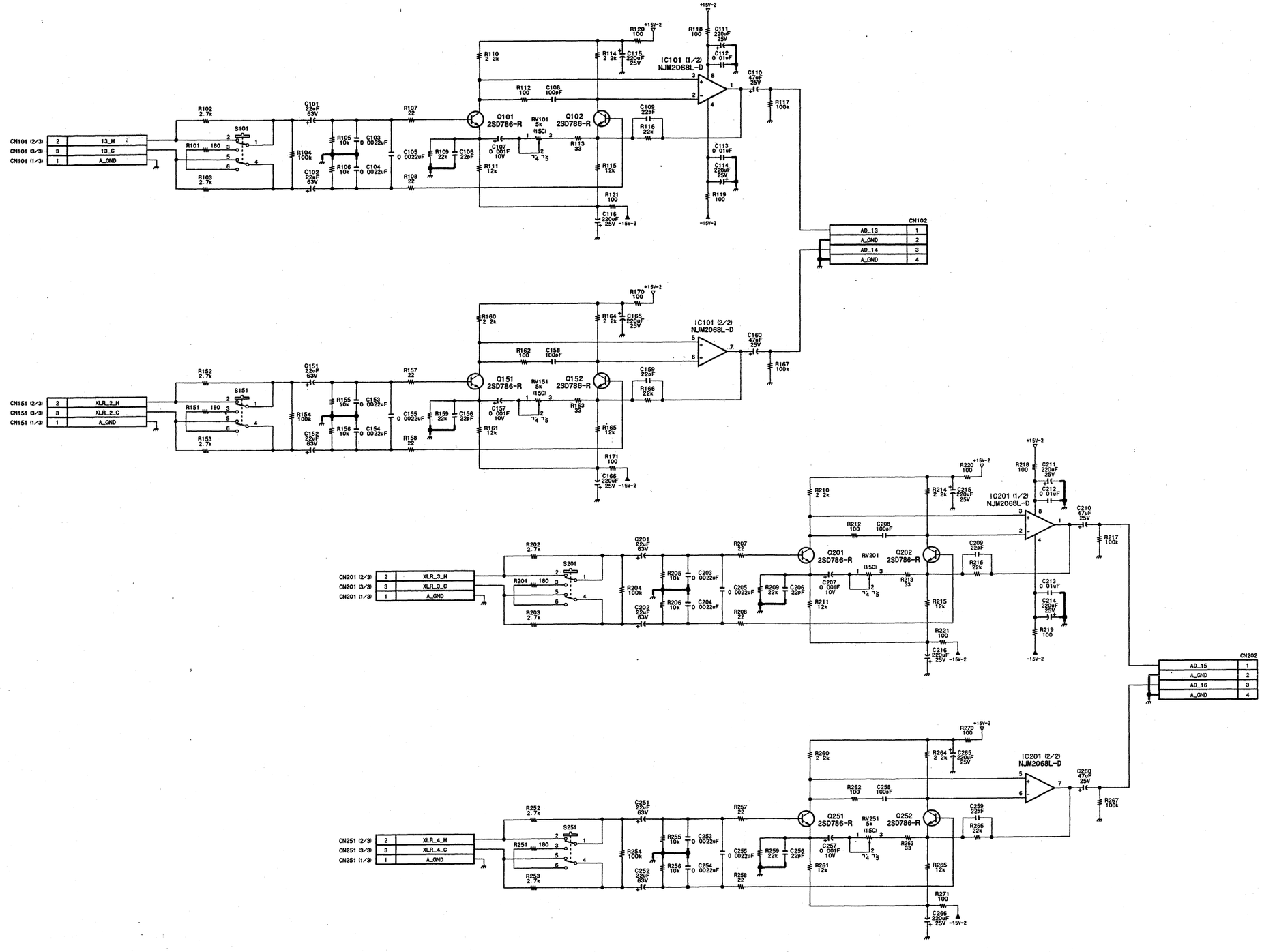

AA-101 (1/4)
BOARD NO. 1-675-878-12
GS-APX-397_AA-101_001_001

AA-101(2/4)

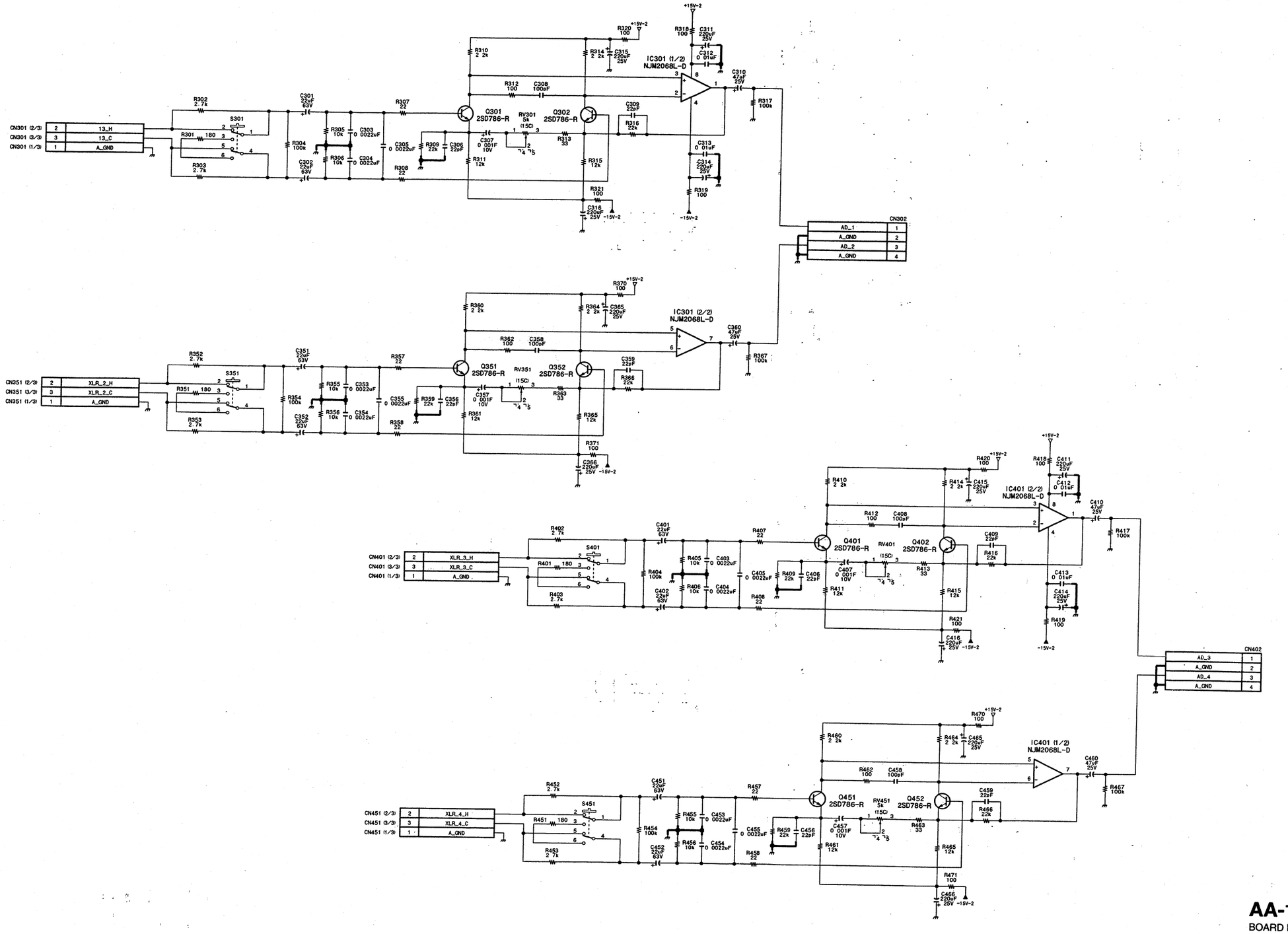

AA-101 (2/4)
BOARD NO. 1-675-878-12
GS-APX-397_AA-101_001_002

DMX-R100/V2

8-5 8-5

SONY-SP1439 / DRUCK 59

AA-101 (3/4)

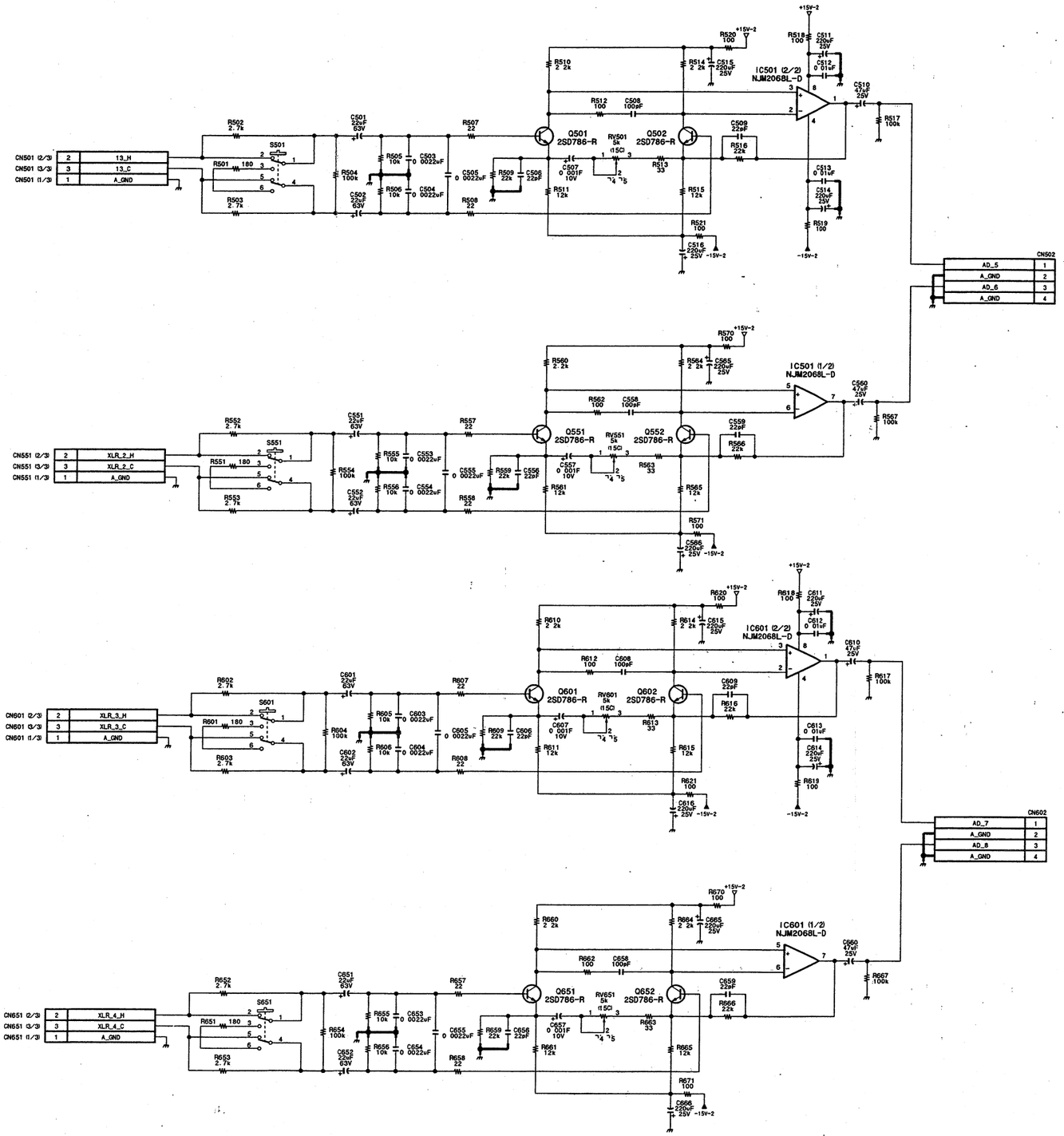

8-6 8-6

AA-101 (3/4)
BOARD NO. 1-675-878-12
GS-APX-397_AA-101_001_003

DMX-R100/V2

AA-101 (4/4)

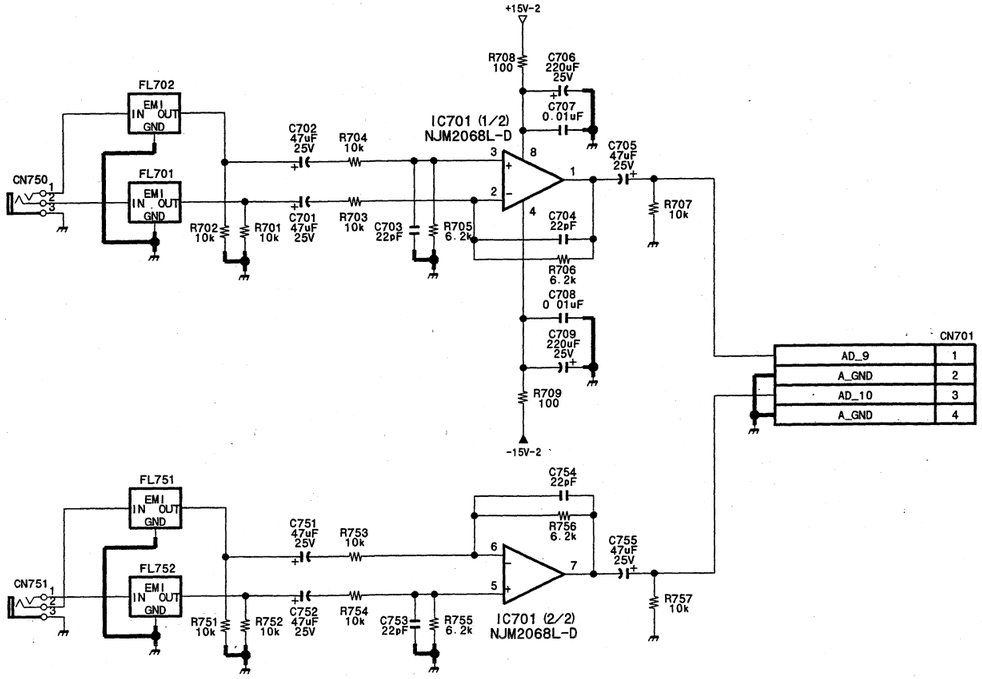

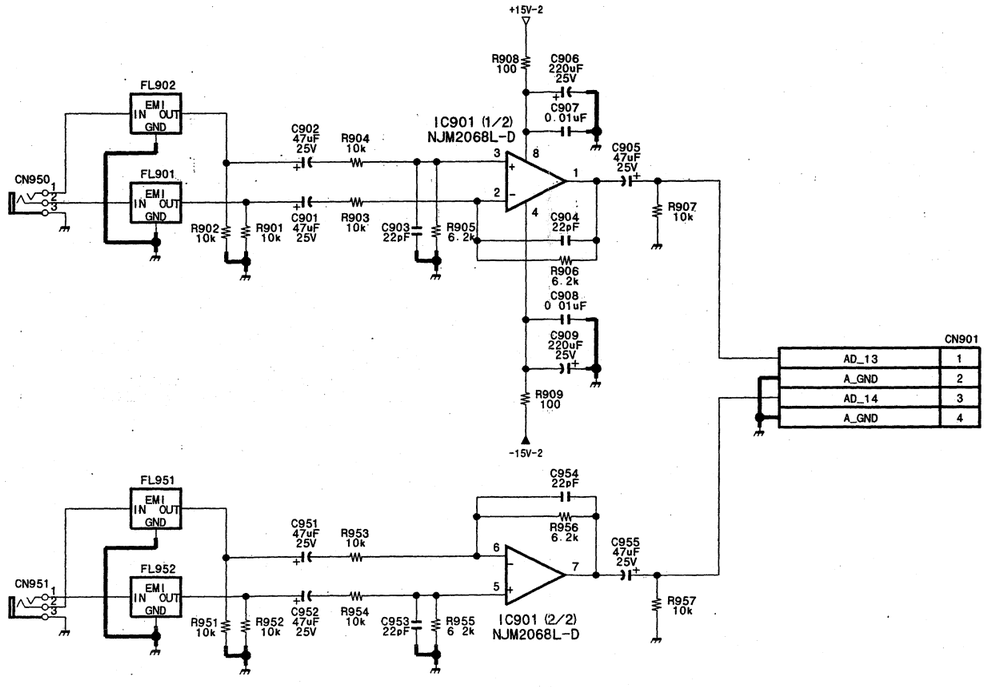

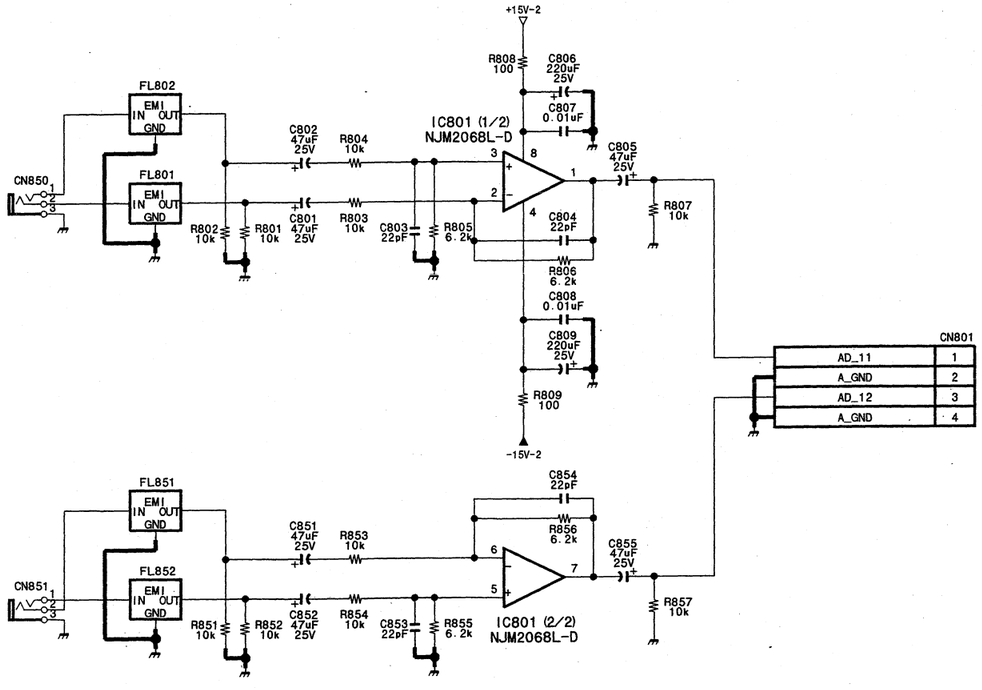

DMX-R100/V2

AA-101 (4/4)
BOARD NO. 1-675-878-12
GS-APX-397_AA-101_001_004

8-7 8-7

SONY-SP1439 / DRUCK 61

AD-158 (1/5)

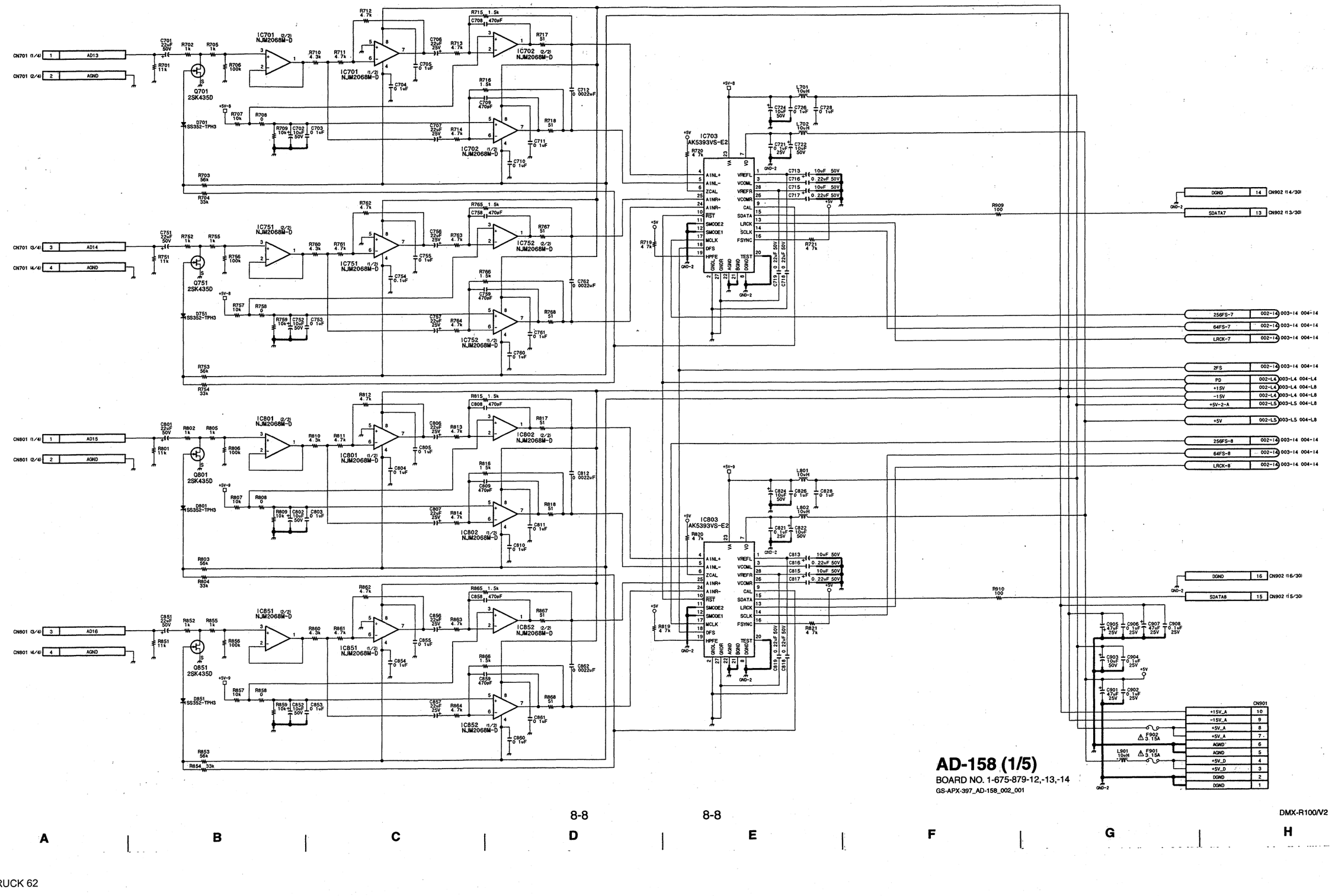
CN701 (1/4) 1 AD13
CN701 (2/4) 2 AGND
CN701 (3/4) 3 AD14
CN701 (4/4) 4 AGND
CN801 (1/4) 1 AD15
CN801 (2/4) 2 AGND
CN801 (3/4) 3 AD16
CN801 (4/4) 4 AGND
IC701 (2/2) NJM2068M-D
IC702 (2/2) NJM2068M-D
IC701 (1/2) NJM2068M-D
IC702 (1/2) NJM2068M-D
IC751 (2/2) NJM2068M-D
IC752 (2/2) NJM2068M-D
IC751 (1/2) NJM2068M-D
IC752 (1/2) NJM2068M-D
IC801 (2/2) NJM2068M-D
IC802 (2/2) NJM2068M-D
IC801 (1/2) NJM2068M-D
IC802 (1/2) NJM2068M-D
IC851 (2/2) NJM2068M-D
IC852 (2/2) NJM2068M-D
IC851 (1/2) NJM2068M-D
IC852 (1/2) NJM2068M-D
Q701 2SK435D
Q751 2SK435D
Q801 2SK435D
Q851 2SK435D
D701 1SS352-TPH3
D751 1SS352-TPH3
D801 1SS352-TPH3
D851 1SS352-TPH3
IC703 AK5393VS-E2
IC803 AK5393VS-E2
VREFL
VCOML
VREFR
VCOMR
CAL
SDATA
LCK
SCLK
FSYNC
TEST
AINL+
AINL-
ZCAL
AINR+
AINR-
RST
SMODE2
SMODE1
MCLK
DFS
HPFE
DGND 14 CN902 (14/30)
SDATA7 13 CN902 (13/30)
DGND 16 CN902 (16/30)
SDATA8 15 CN902 (15/30)
256FS-7 002-14 003-14 004-14
64FS-7 002-14 003-14 004-14
LRCK-7 002-14 003-14 004-14
2FS 002-14 003-14 004-14
PD 002-L4 003-L4 004-L4
+15V 002-L4 003-L4 004-L8
-15V 002-L4 003-L4 004-L8
+5V-2-A 002-L5 003-L5 004-L8
+5V 002-L5 003-L5 004-L8
256FS-8 002-14 003-14 004-14
64FS-8 002-14 003-14 004-14
LRCK-8 002-14 003-14 004-14
CN901
+15V_A 10
-15V_A 9
+5V_A 8
+5V_A 7
AGND 6
AGND 5
+5V_D 4
+5V_D 3
DGND 2
DGND 1
F902 3.15A
F901 3.15A
L901 10uH
AD-158 (1/5)
BOARD NO. 1-675-879-12,-13,-14
GS-APX-397_AD-158_002_001
8-8
8-8
DMX-R100/V2

AD-158 (2/5)

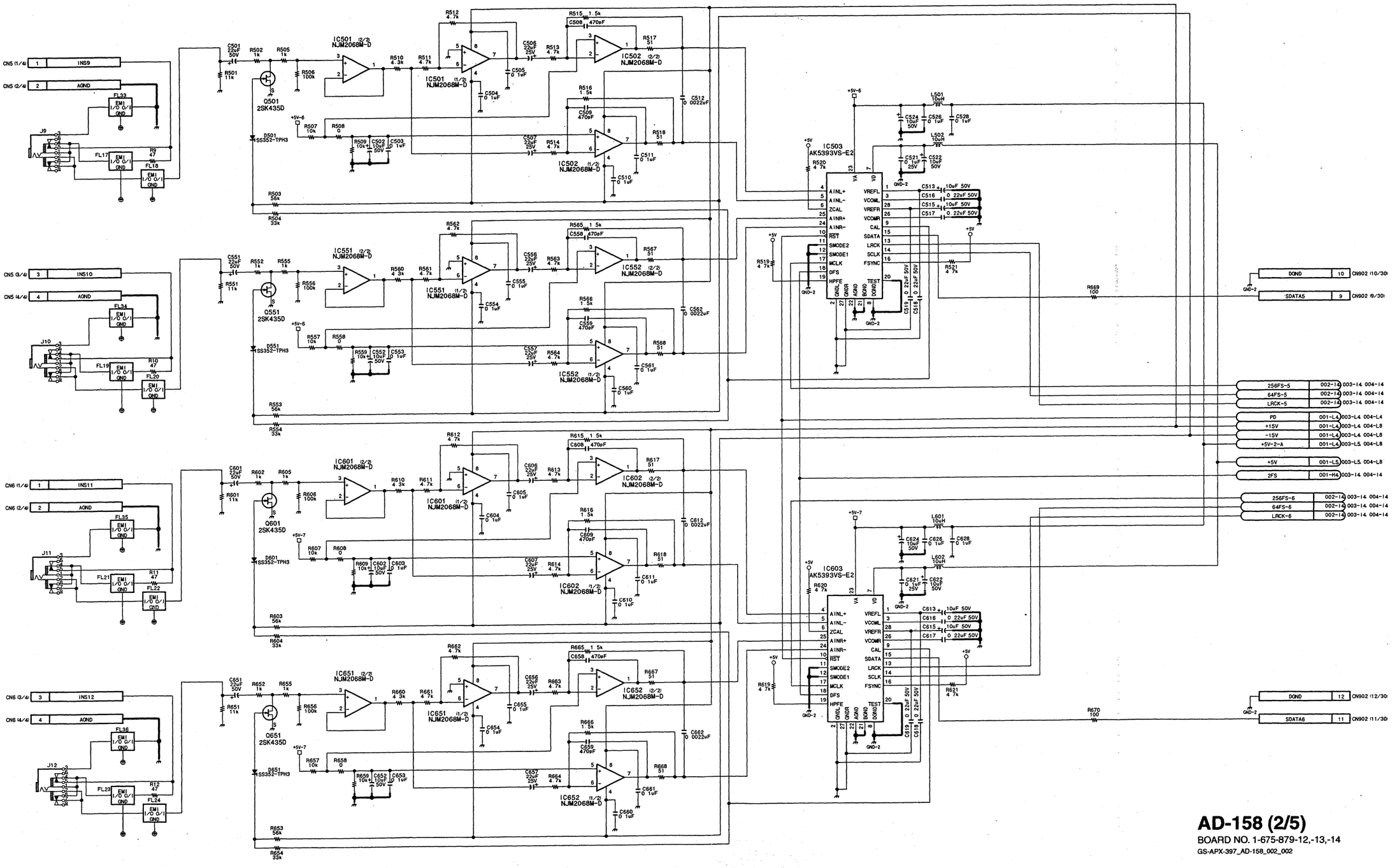

AD-158 (2/5)
BOARD NO. 1-675-879-12,-13,-14
GS-APX-397_AD-158_002_002

8-9 8-9

DMX-R100/V2

AD-158 (3/5)

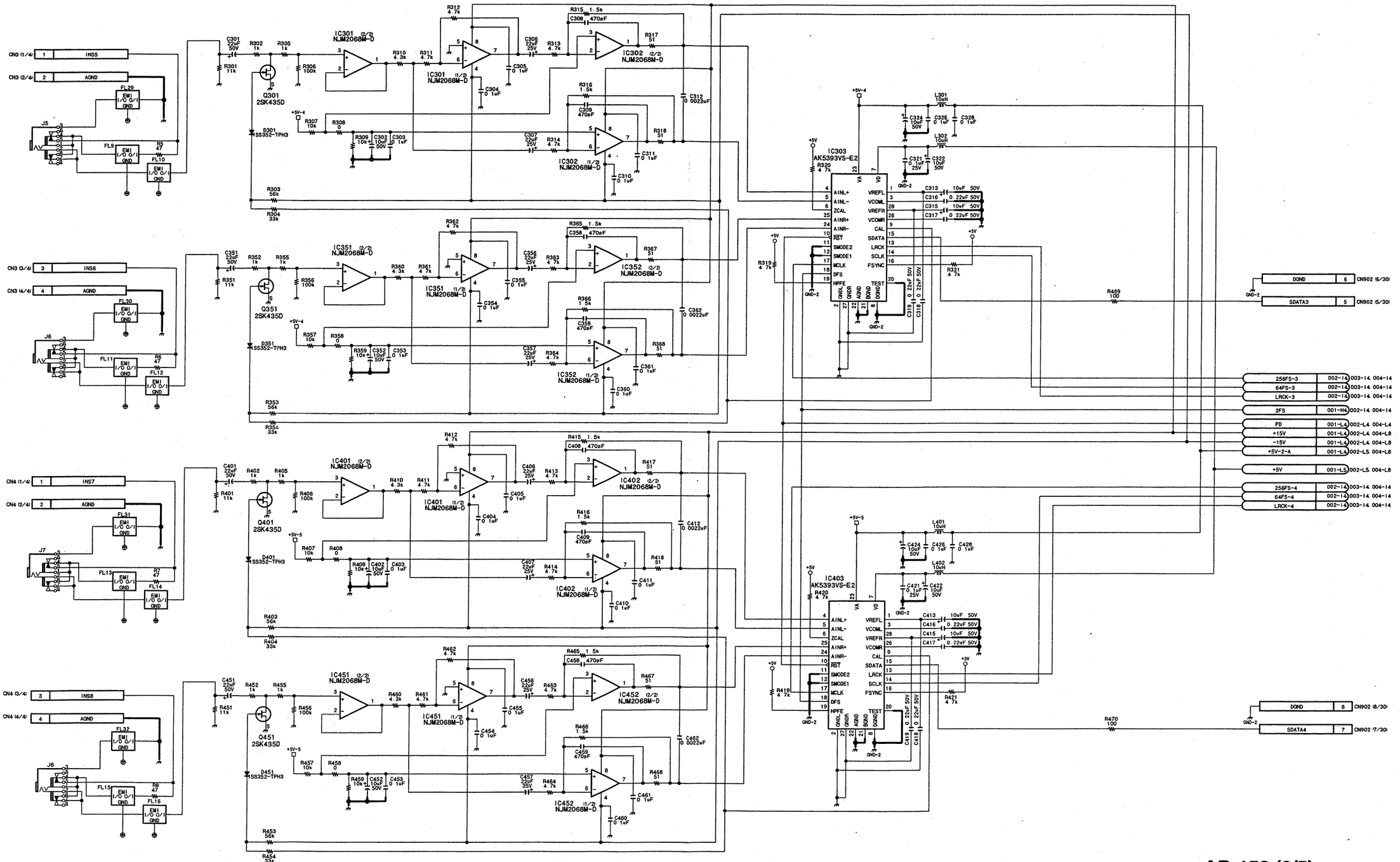

AD-158 (3/5)

BOARD NO. 1-675-879-12,-13,-14

GS-APX-397_AD-158_002_003

8-10 8-10

DMX-R100/V2

AD-158 (4/5)

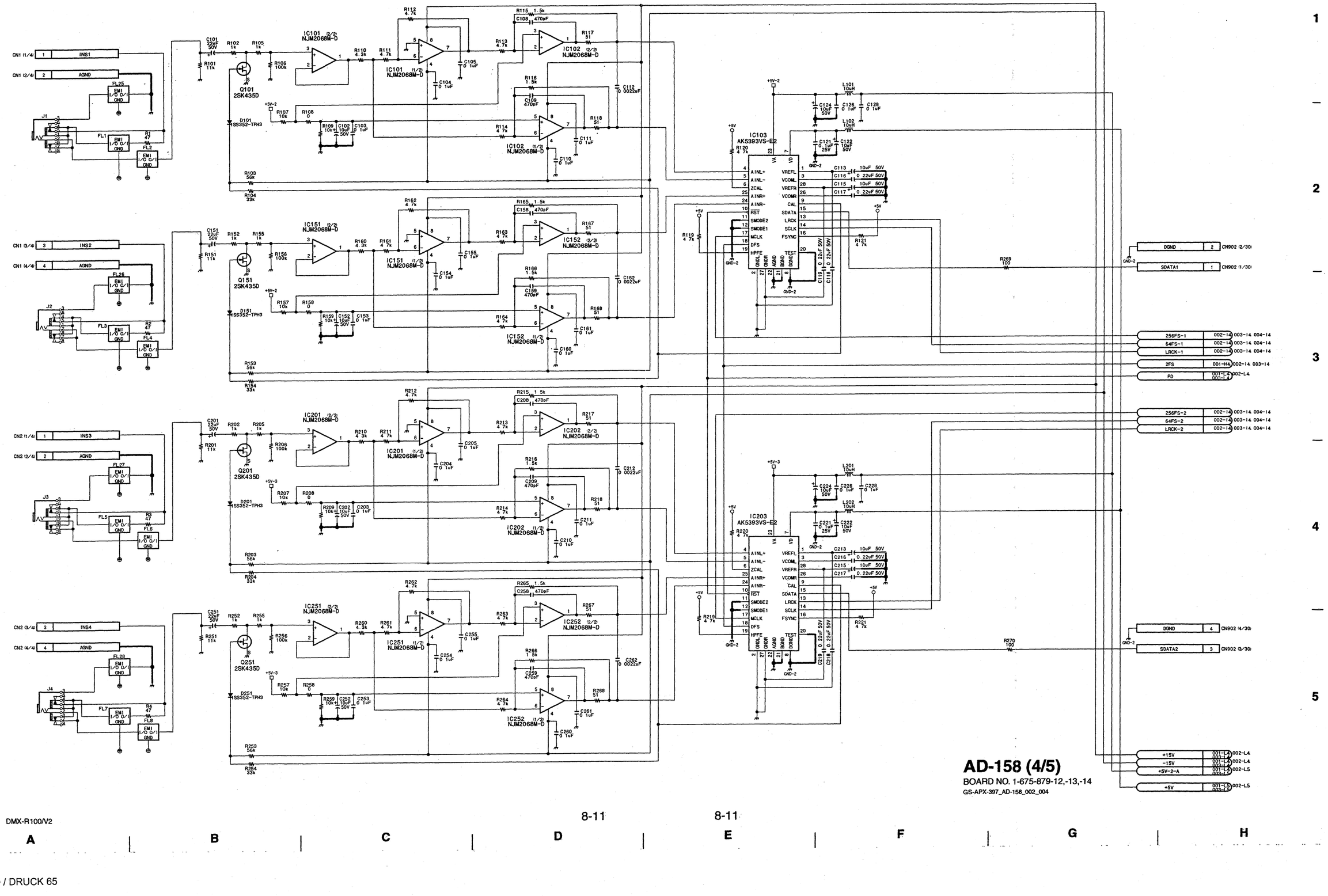

AD-158 (4/5)

BOARD NO. 1-675-879-12,-13,-14

GS-APX-397_AD-158_002_004

8-11

8-11

DMX-R100/V2

SONY-SP1439 / DRUCK 65

AD-158 (5/5)

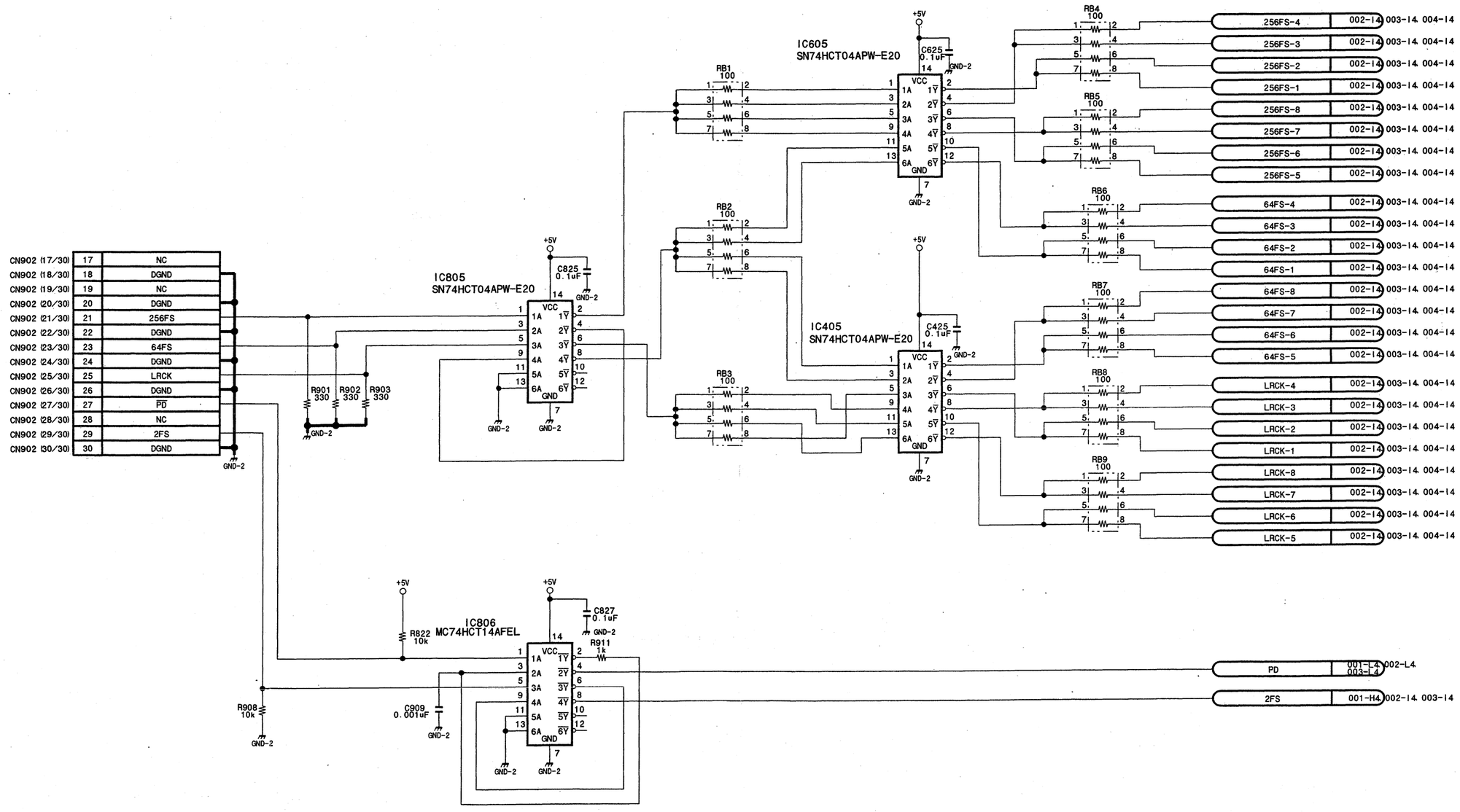

AD-158 (5/5)

BOARD NO. 1-675-879-12,-13,-14

GS-APX-397_AD-158_002_005

AC-119, ASW-57

*:

	AC-199 (UC)	AC-199A (CE)	AC-199B (J)
JW1	MT	MT	NM
JW2	NM	NM	MT
F1	10A	5.0A	10A

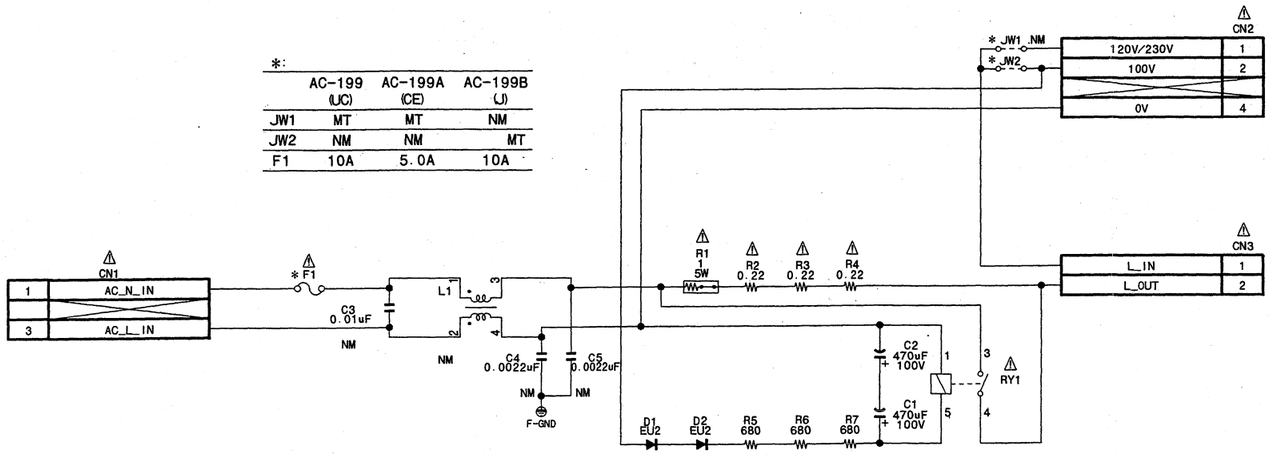

AC-199/199A/199B

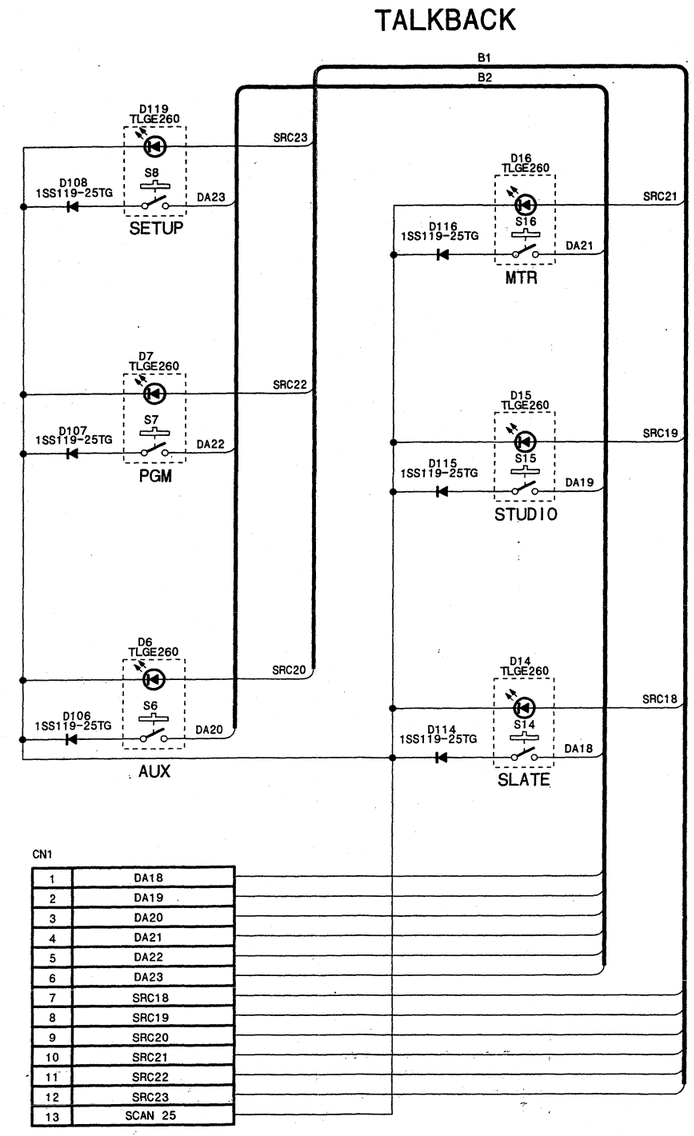

ASW-57

AC-199/199A/199B

BOARD NO. 1-675-887-12,-13

GS-APX-397_AC-199_001_001

ASW-57

BOARD NO. 1-675-870-12

GS-APX-397_ASW-57_001_001

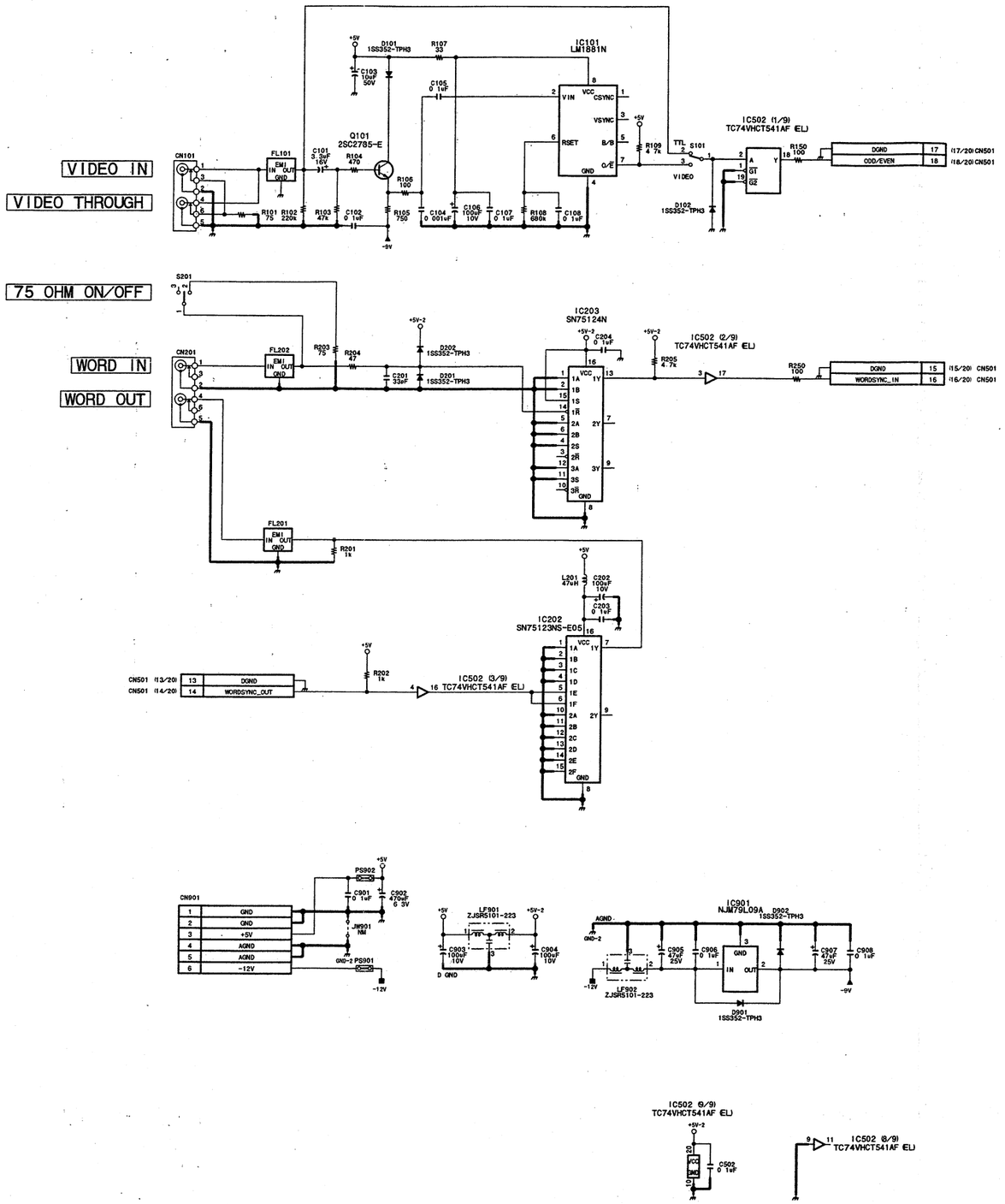

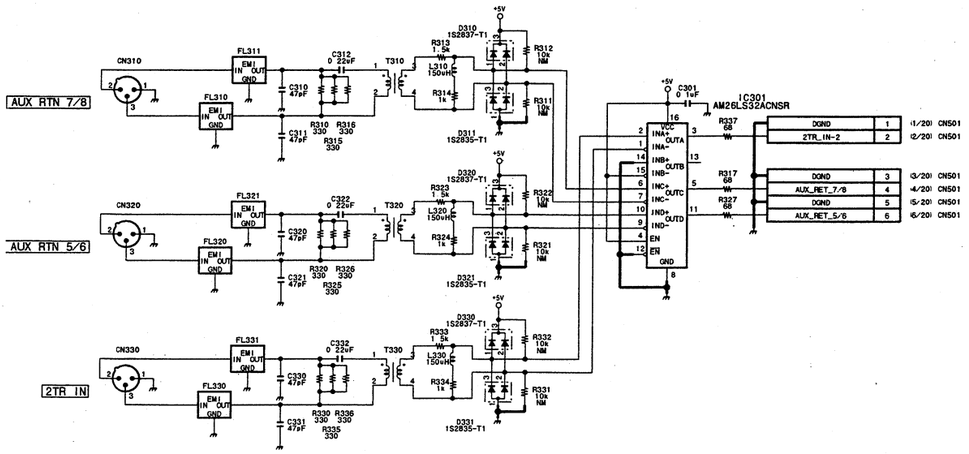

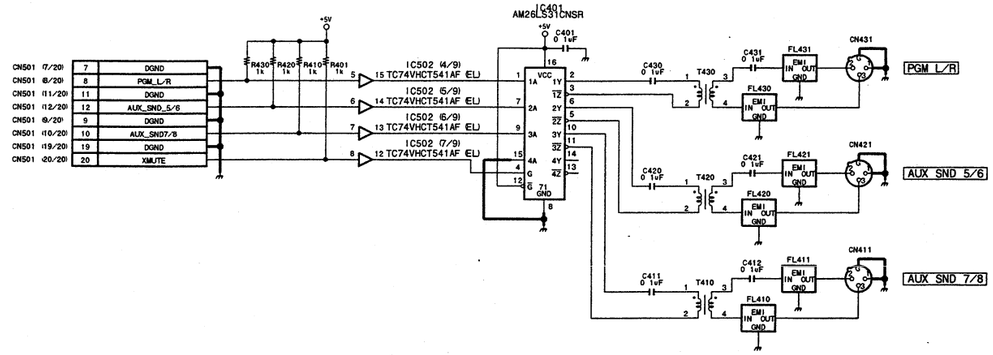

CN-1771

BOARD NO. 1-675-885-12,-13

GS-APX-397_CN-1771_001_001

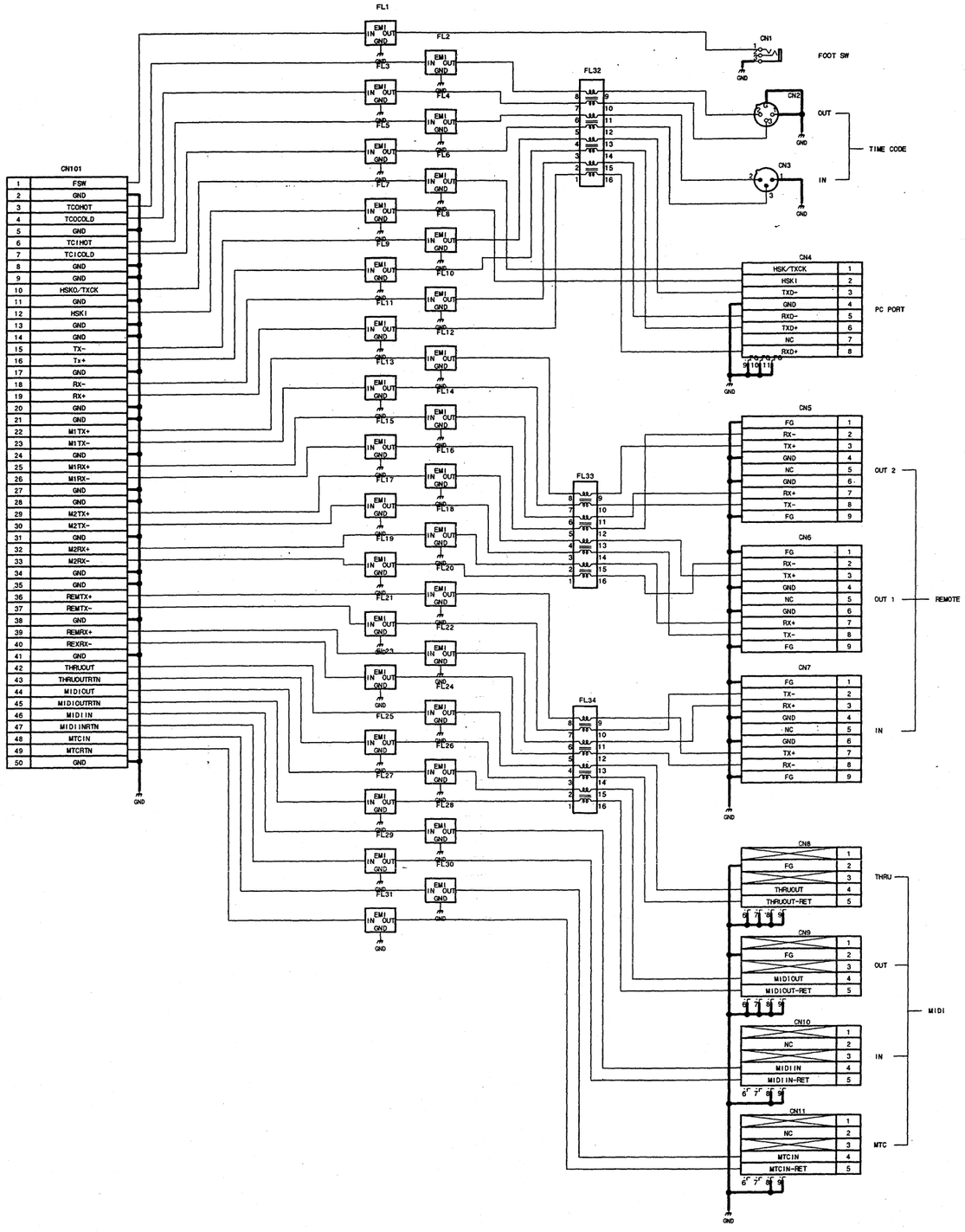

CN-1772
BOARD NO. 1-675-886-12
GS-APX-397_CN-1772_001_001

DMX-R100/V2

8-15 8-15

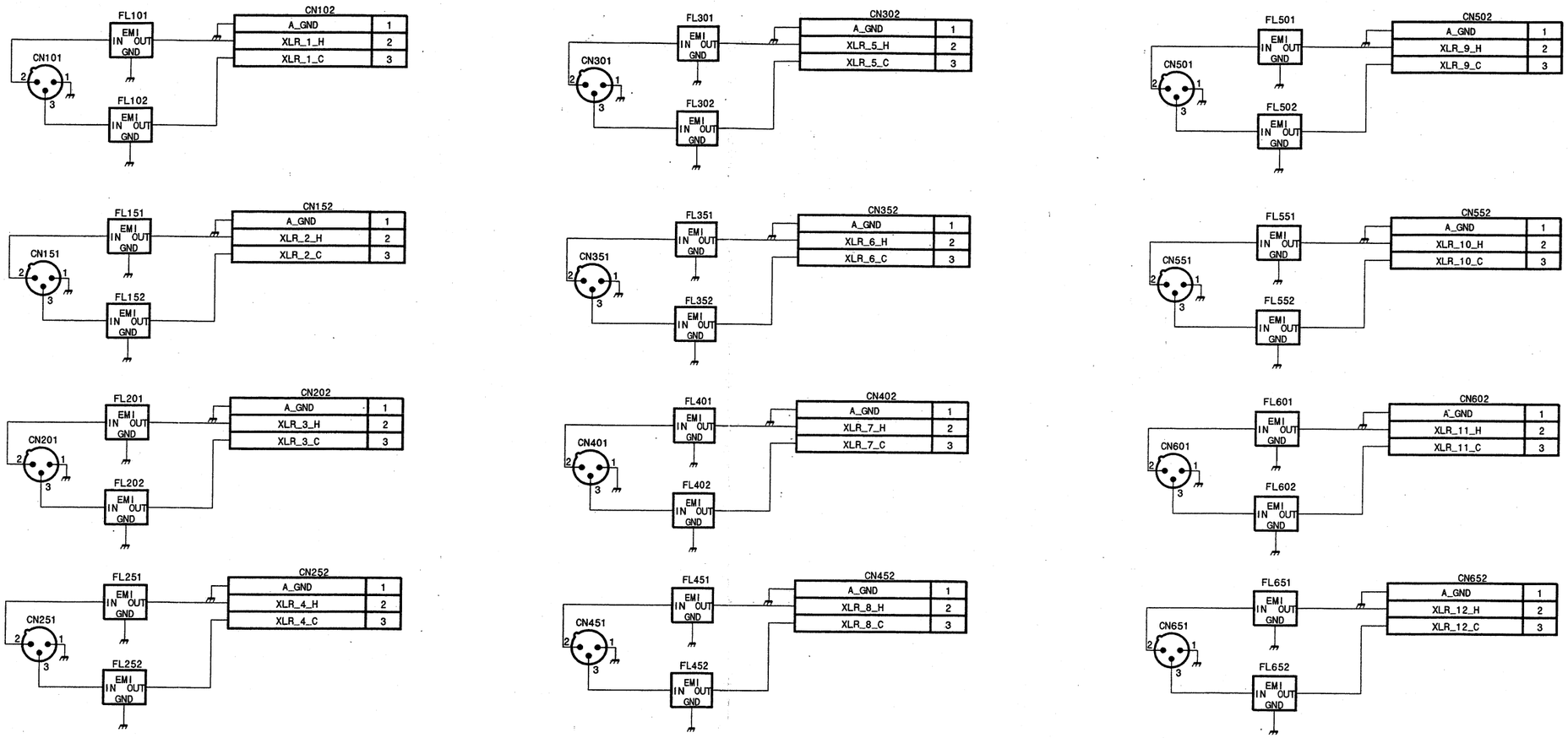

CN-1788

BOARD NO. 1-675-875-12,-13

GS-APX-397_CN-1788_001_001

8-16 8-16

DMX-R100/V2

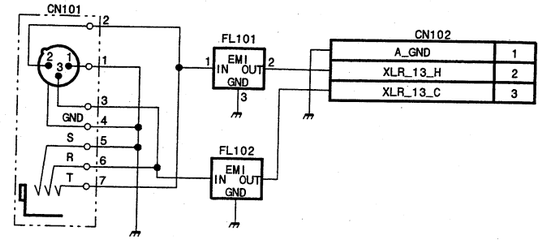

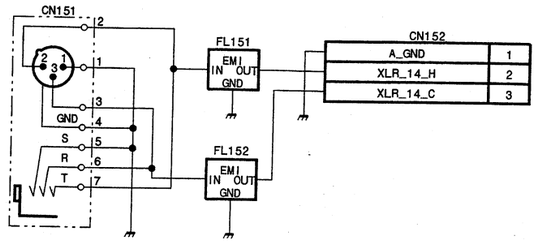

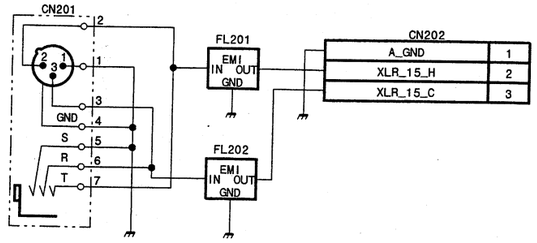

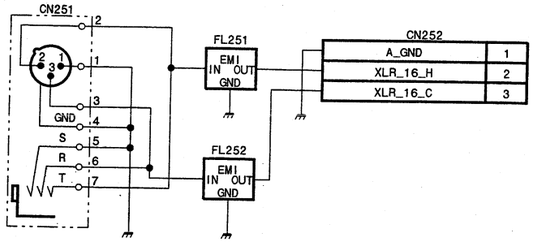

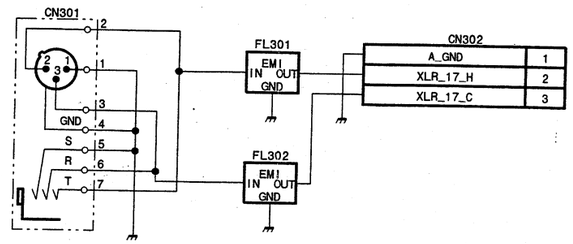

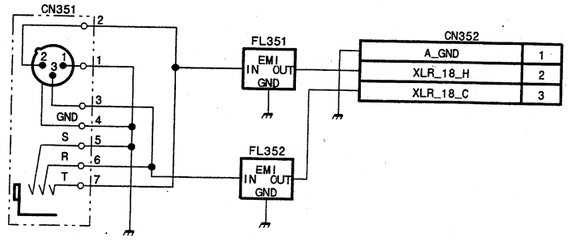

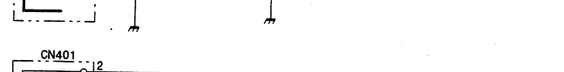

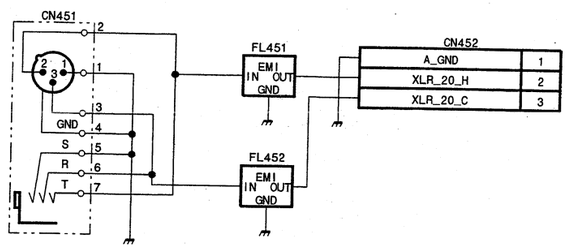

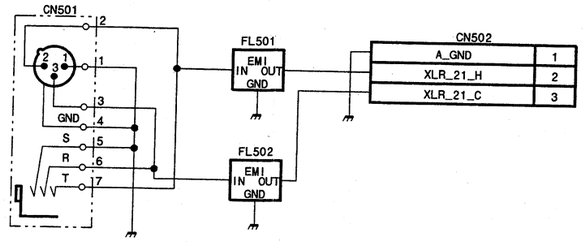

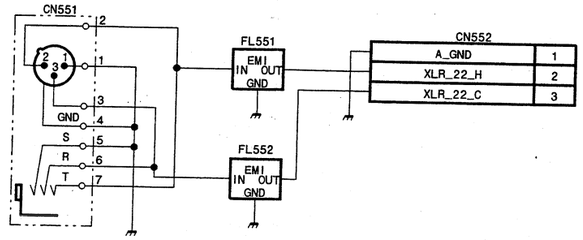

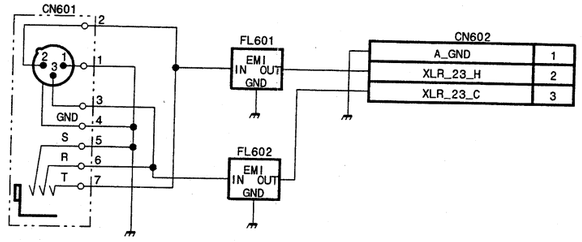

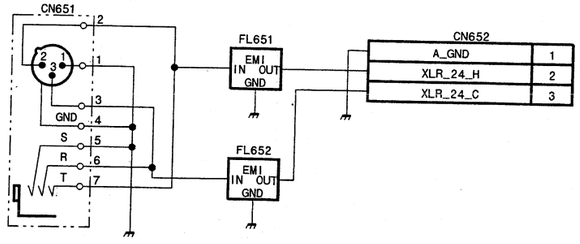

CN-1789
BOARD NO. 1-675-877-12,-13
GS-APX-397_CN-1789_001_001

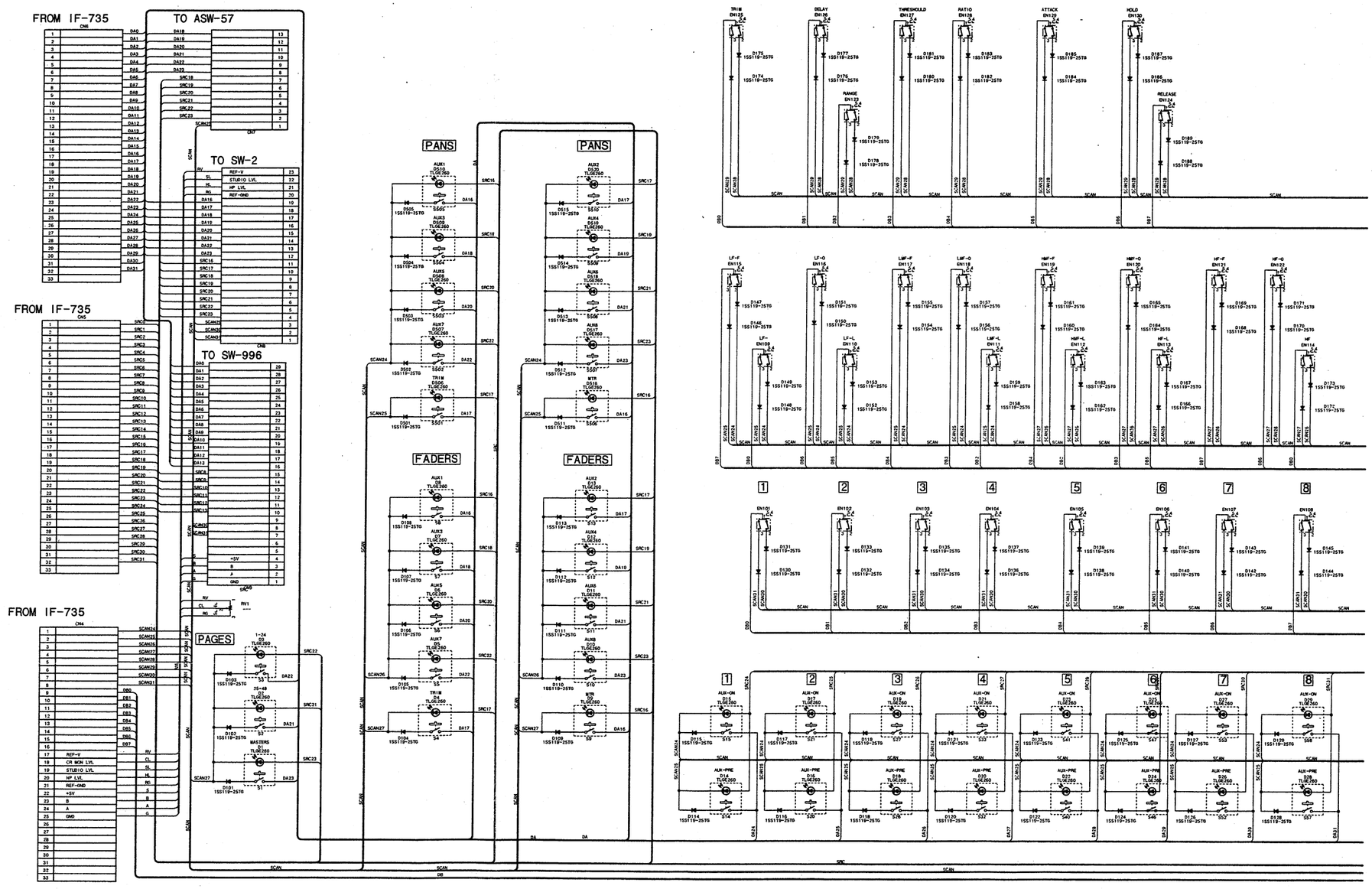

8-18 8-18

DMX-R100/V2

SONY-SP1439 / DRUCK 72

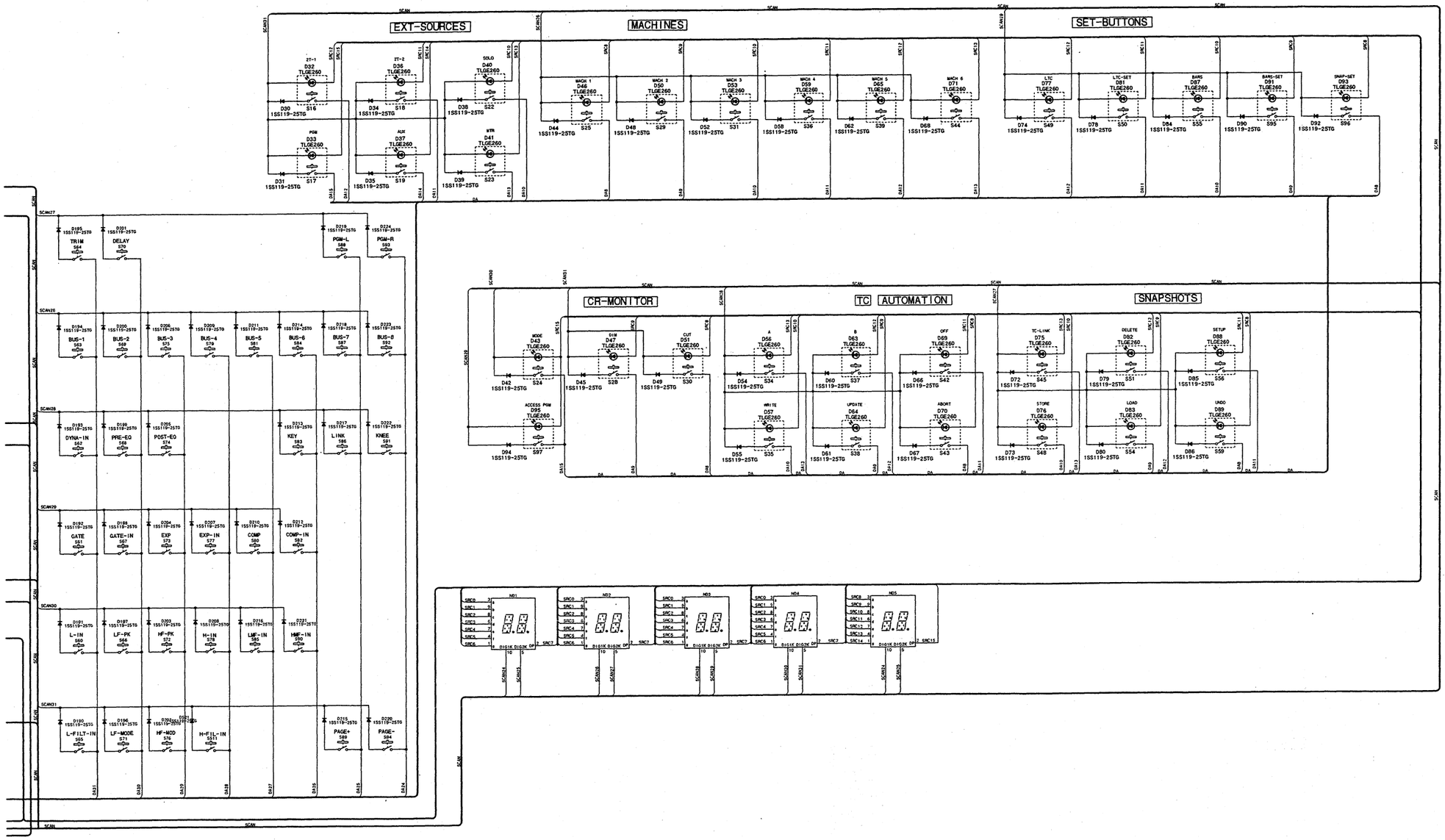

CP-339
BOARD NO. 1-675-869-12
GS-APX-397_CP-339_001_001

DMX-R100/V2

8-19 8-19

SONY-SP1439 / DRUCK 73

CPU-284 (1/9)

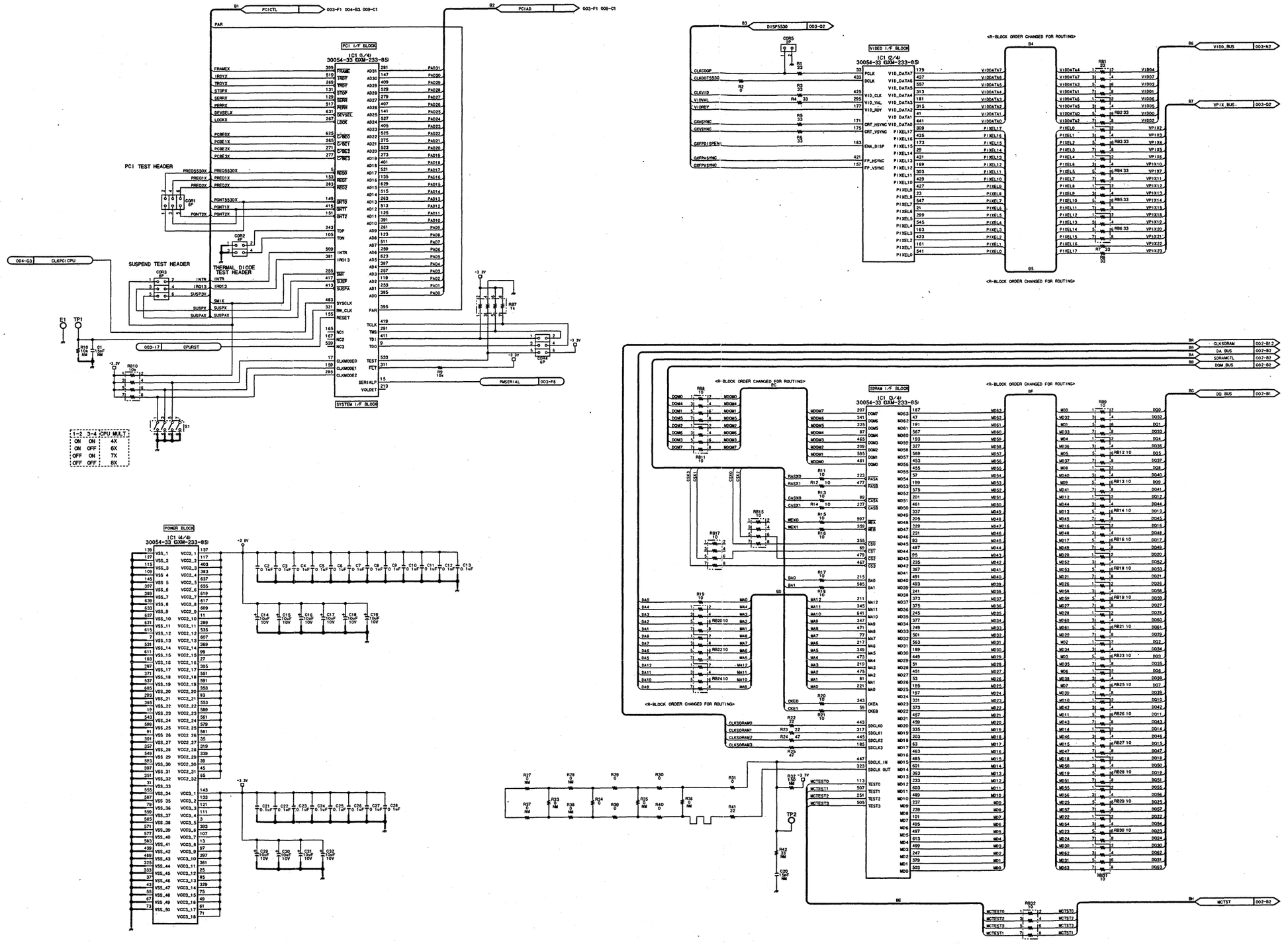

CPU-284 (1/9)
BOARD NO. 1-675-891-12
GS-APX-397_CPU-284_001_001

DMX-R100/V2

CPU-284 (2/9)

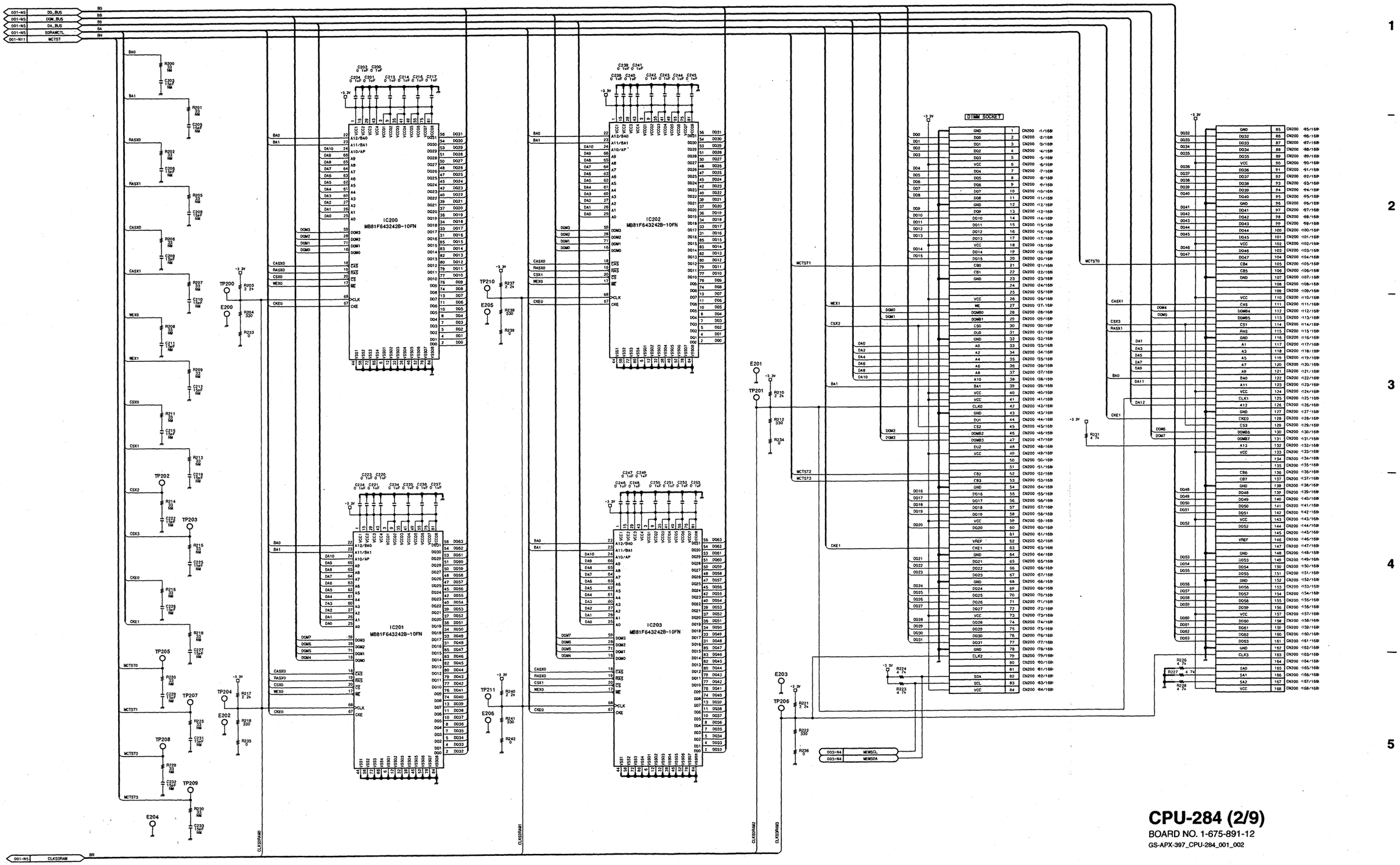

CPU-284 (2/9)
BOARD NO. 1-675-891-12
GS-APX-397_CPU-284_001_002

DMX-R100/V2

CPU-284 (3/9)

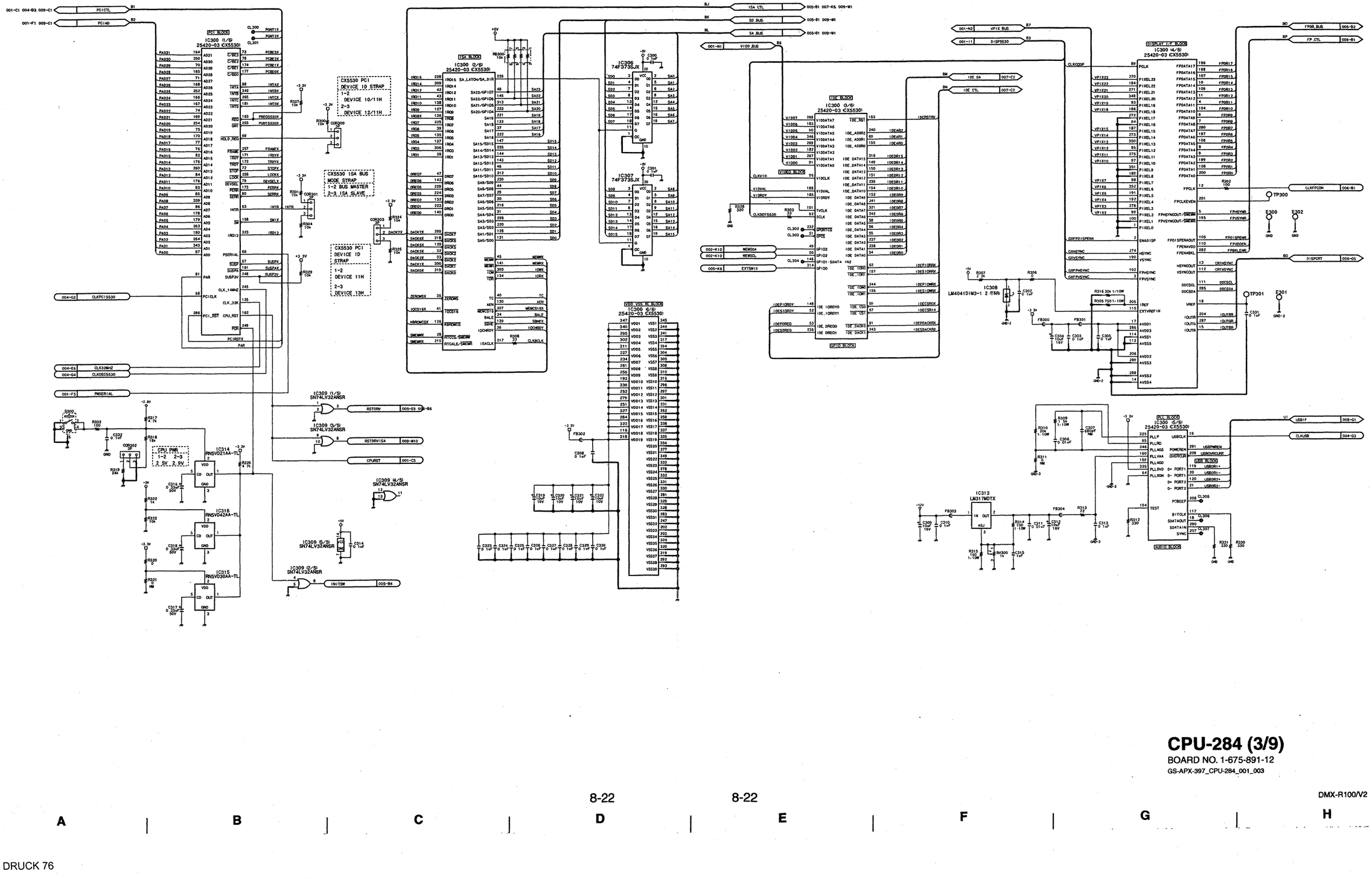

8-22

CPU-284 (3/9)

BOARD NO. 1-675-891-12

GS-APX-397_CPU-284_001_003

CPU-284 (4/9)

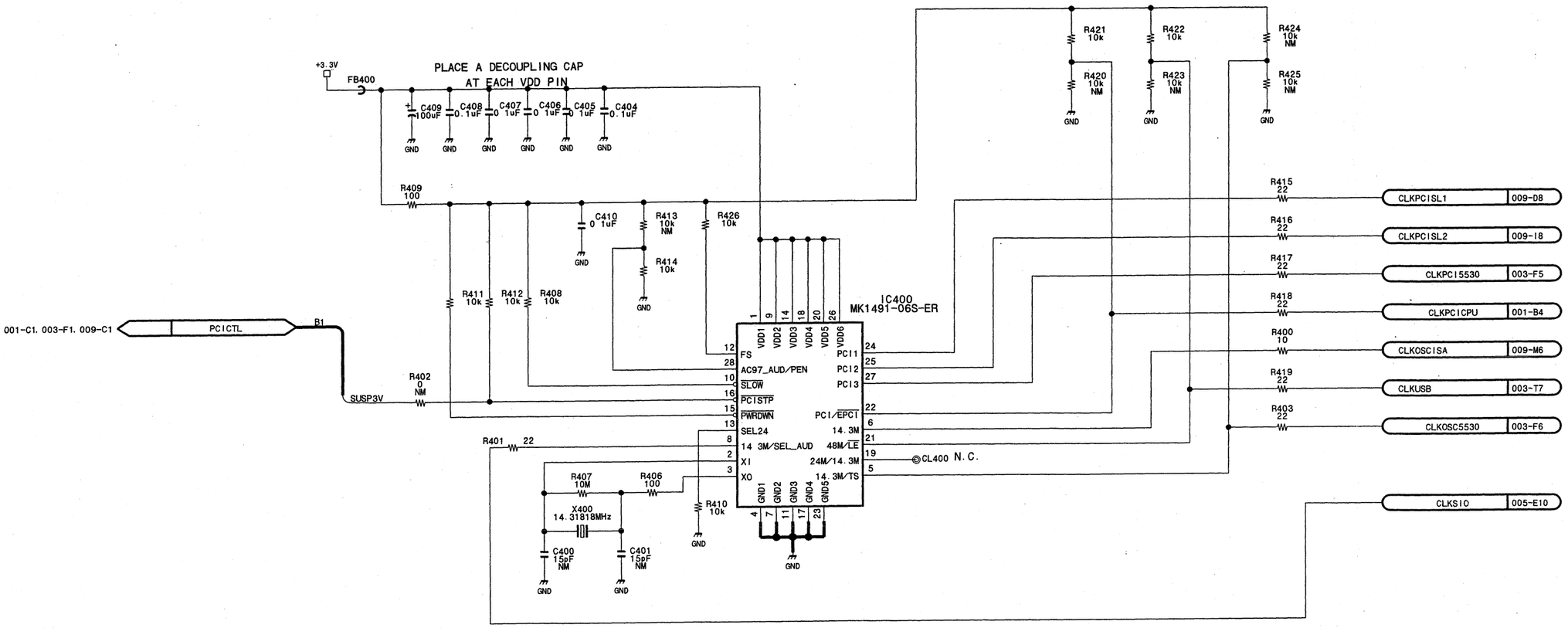

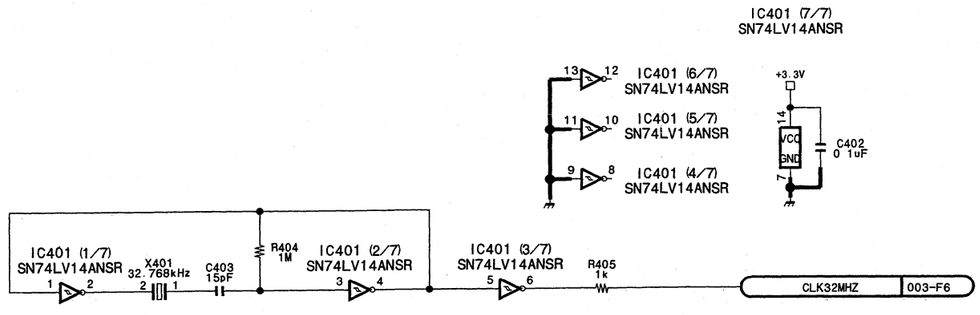

CPU-284 (4/9)
BOARD NO. 1-675-891-12
GS-APX-397_CPU-284_001_004

CPU-284 (5/9)

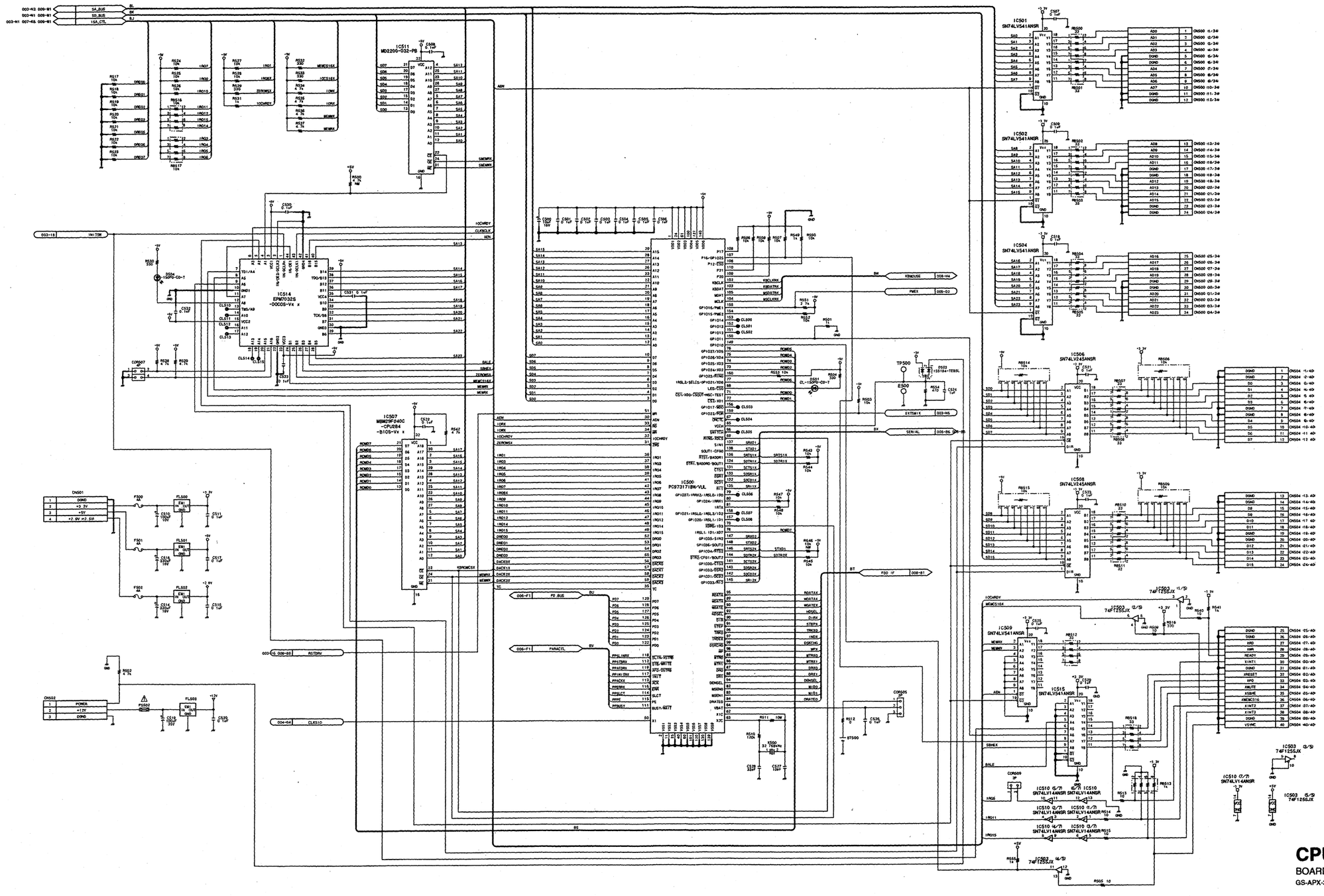
IC501 SN74LV541ANSR
IC502 SN74LV541ANSR
IC504 SN74LV541ANSR
IC506 SN74LV245ANSR
IC508 SN74LV245ANSR
IC514 EPM7032S -00CQS-Vx x
IC507 M38K07F4AXC -CPU284 -B105-Vx x
IC511 MD2200-032-PB
IC500 PC97317VBH-VUL
IC550 32.768kHz
IC503 74F125SJX
IC510 SN74LV14ANSR
IC509 SN74LV541ANSR
IC515 SN74LV541ANSR
IC505 SN74LV541ANSR
IC512 SN74LV541ANSR
IC513 SN74LV541ANSR
IC516 SN74LV541ANSR
IC517 SN74LV541ANSR
IC518 SN74LV541ANSR
IC519 SN74LV541ANSR
IC520 SN74LV541ANSR
IC521 SN74LV541ANSR
IC522 SN74LV541ANSR
IC523 SN74LV541ANSR
IC524 SN74LV541ANSR
IC525 SN74LV541ANSR
IC526 SN74LV541ANSR
IC527 SN74LV541ANSR
IC528 SN74LV541ANSR
IC529 SN74LV541ANSR
IC530 SN74LV541ANSR
IC531 SN74LV541ANSR
IC532 SN74LV541ANSR
IC533 SN74LV541ANSR
IC534 SN74LV541ANSR
IC535 SN74LV541ANSR

CPU-284 (6/9)

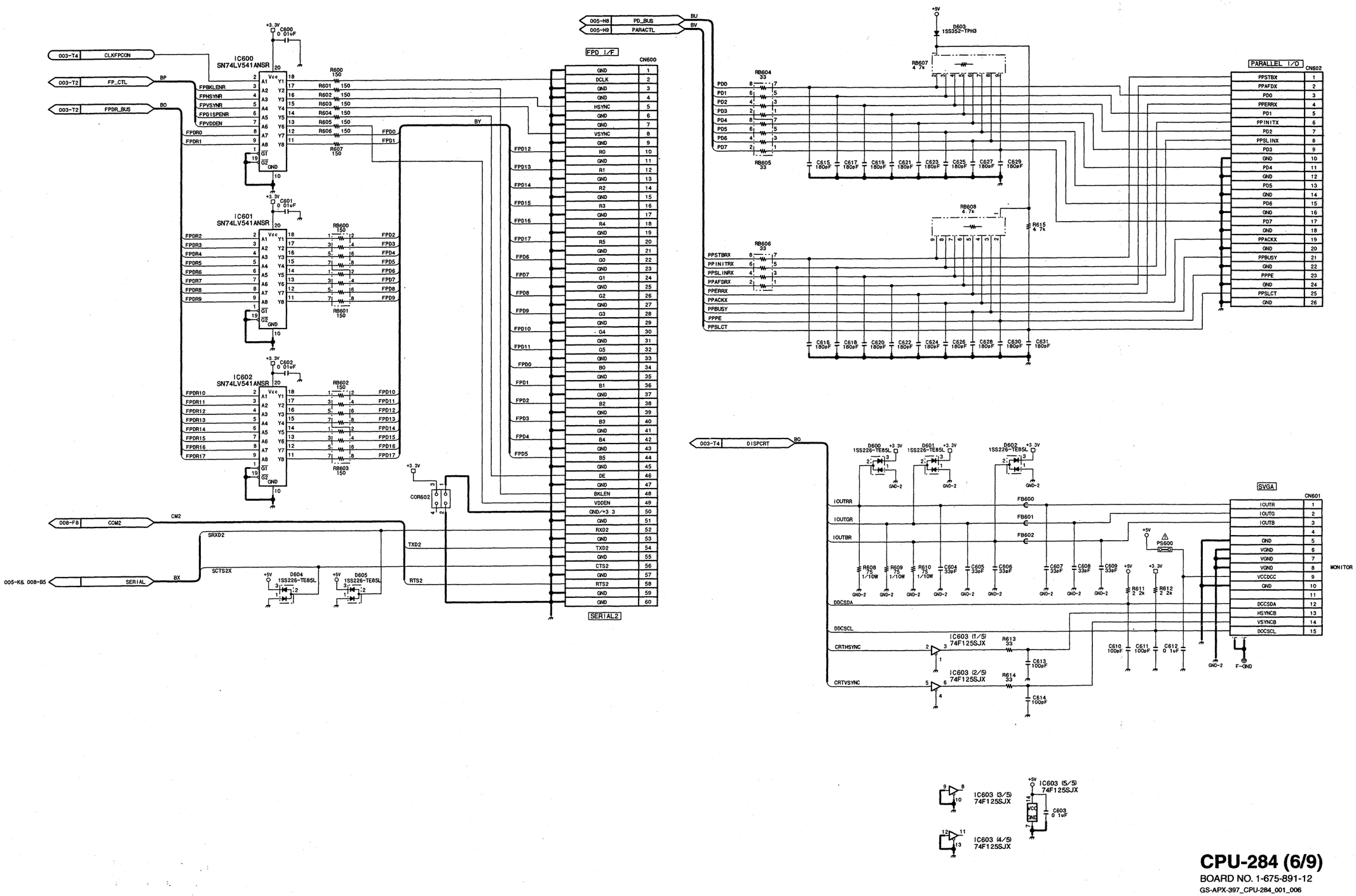

CPU-284 (6/9)

BOARD NO. 1-675-891-12

GS-APX-397_CPU-284_001_006

CPU-284 (7/9)

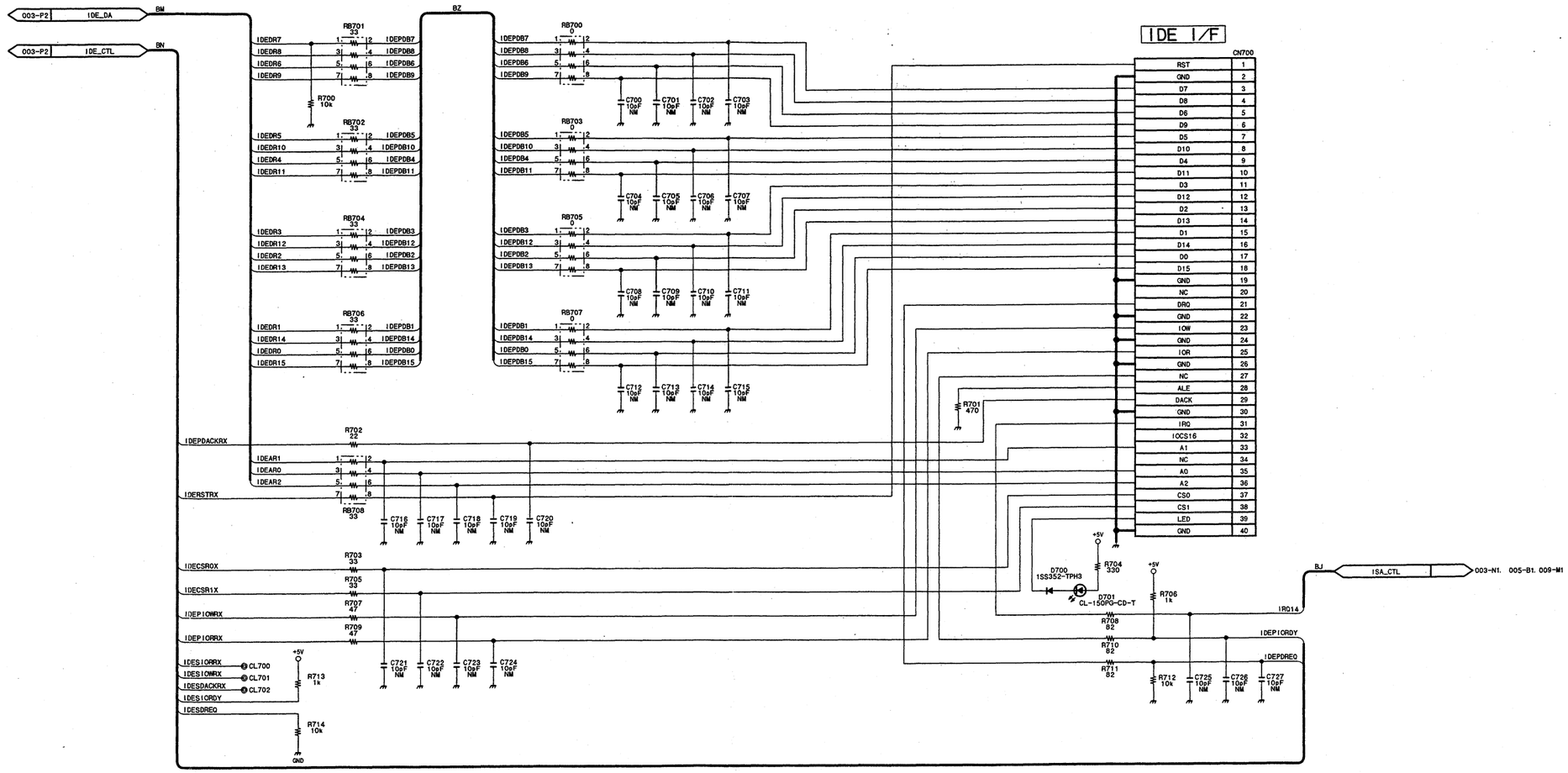

CPU-284 (7/9)
BOARD NO. 1-675-891-12
GS-APX-397_CPU-284_001_007

8-26 8-26

DMX-R100/V2

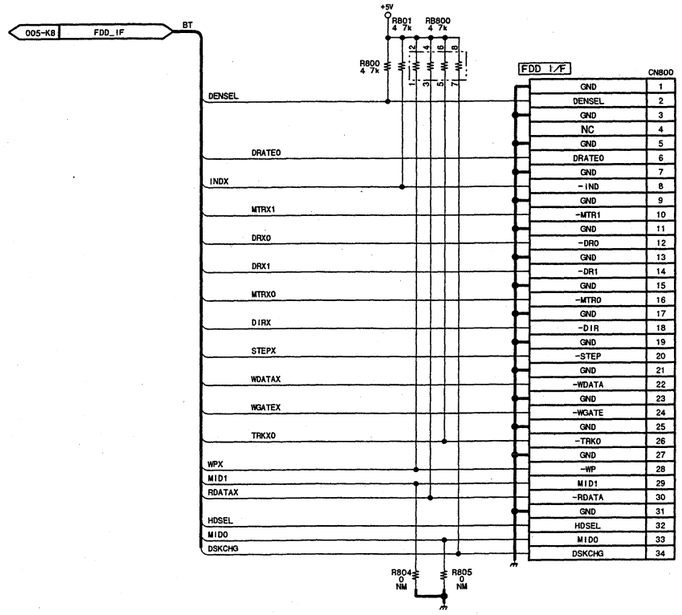

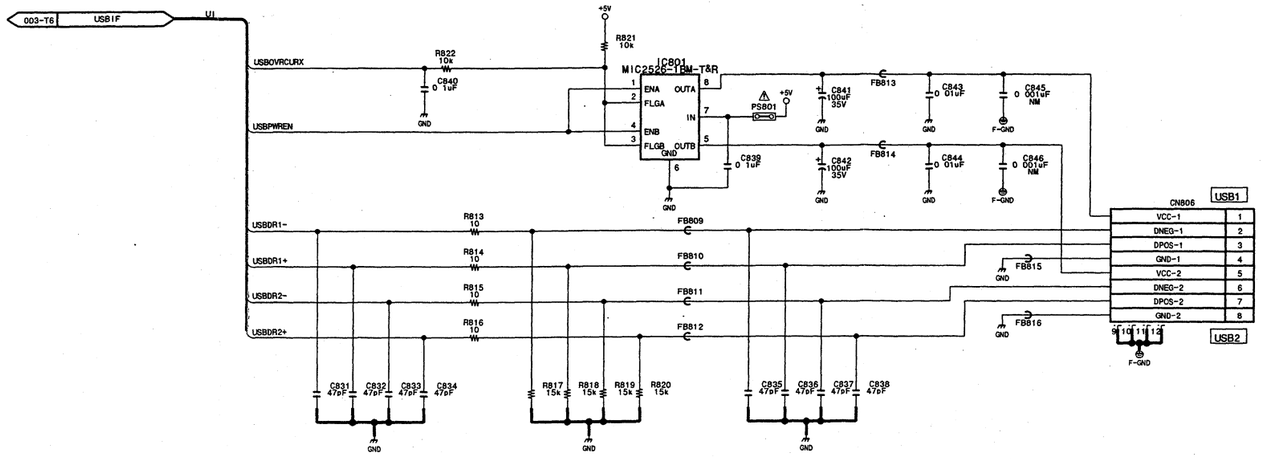

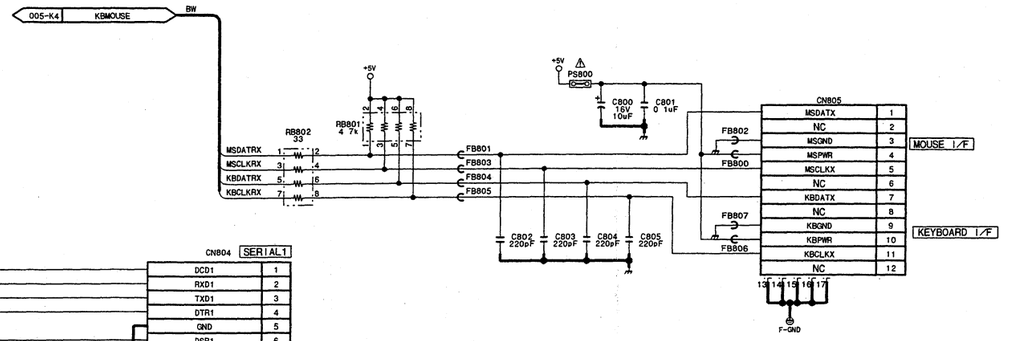

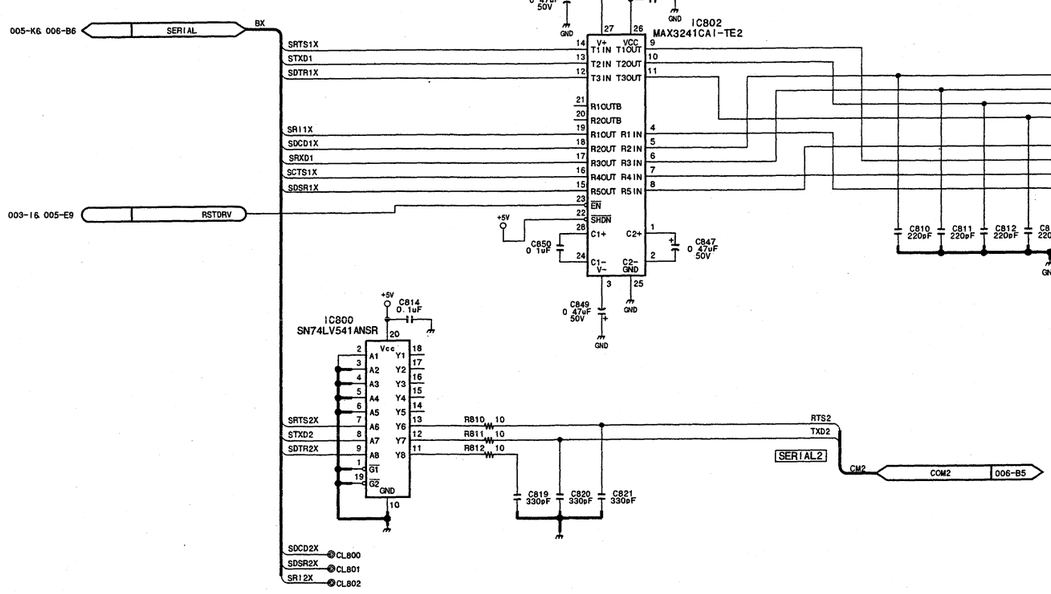

CPU-284 (8/9)
BOARD NO. 1-675-891-12
GS-APX-397_CPU-284_001_008

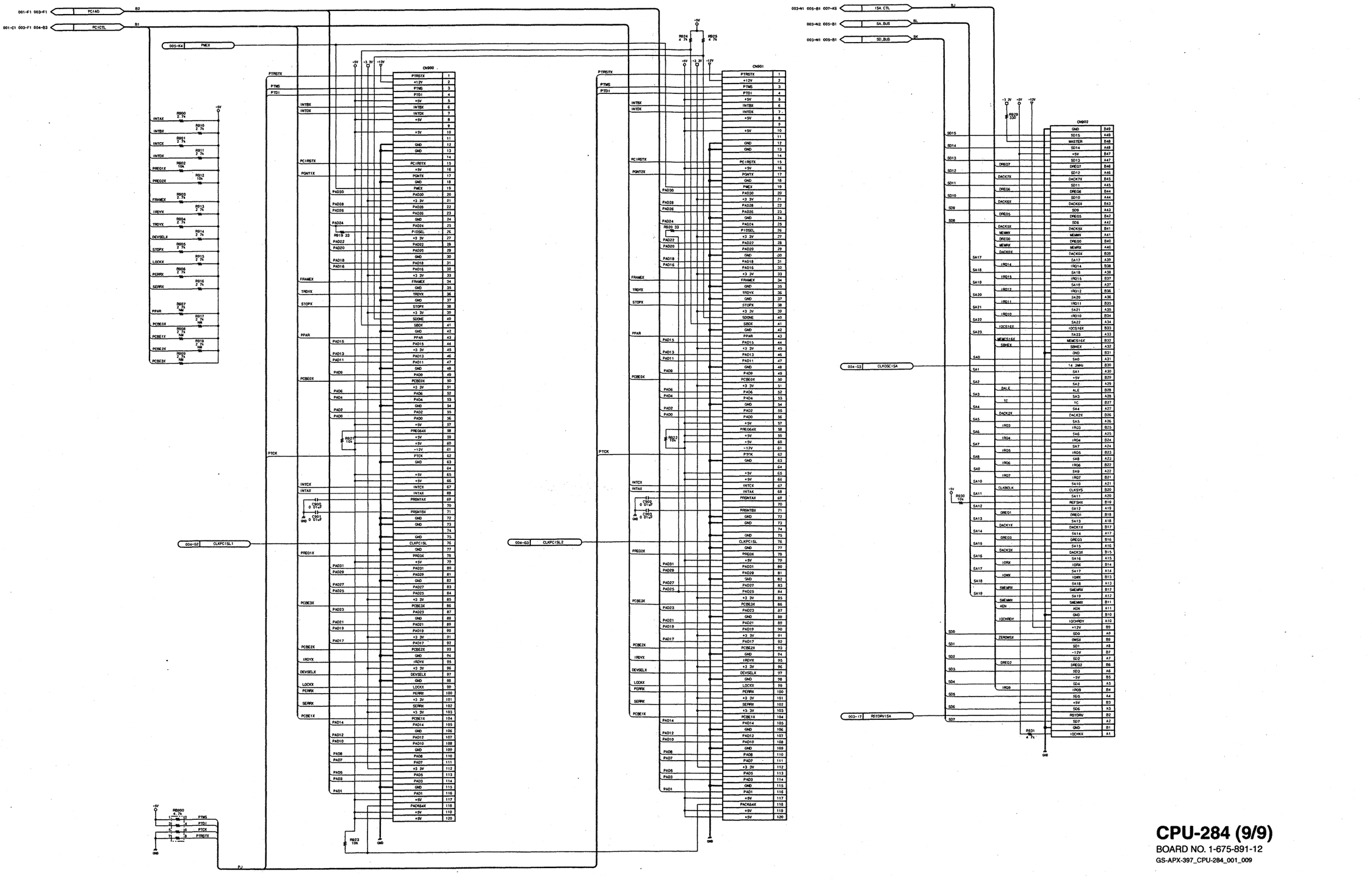

CPU-284 (9/9)

BOARD NO. 1-675-891-12

GS-APX-397_CPU-284_001_009

DMX-R100/V2

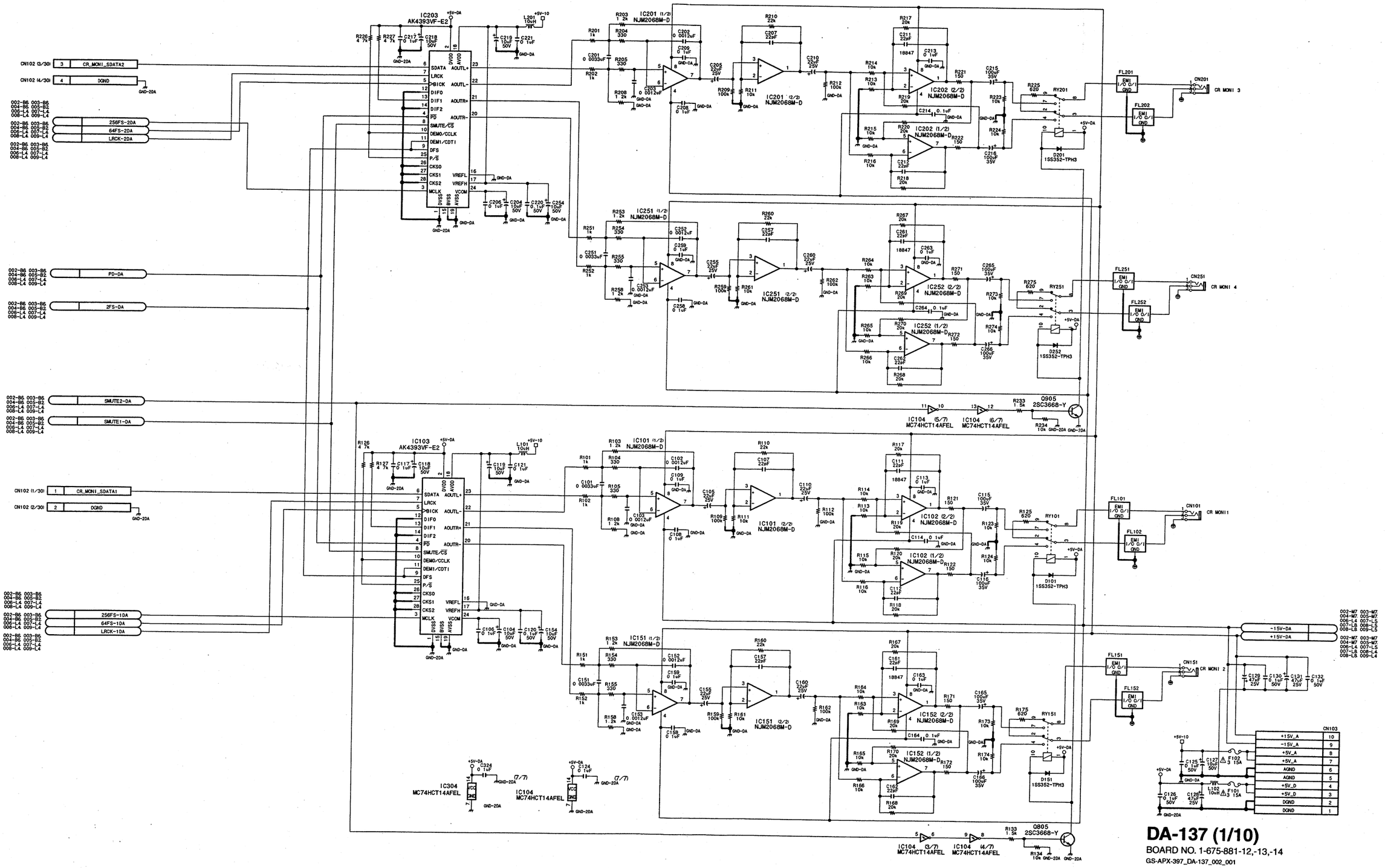

DA-137 (1/10)

BOARD NO. 1-675-881-12,-13,-14

GS-APX-397_DA-137_002_001

DMX-R100/V2

8-29 8-29

DA-137 (2/10)

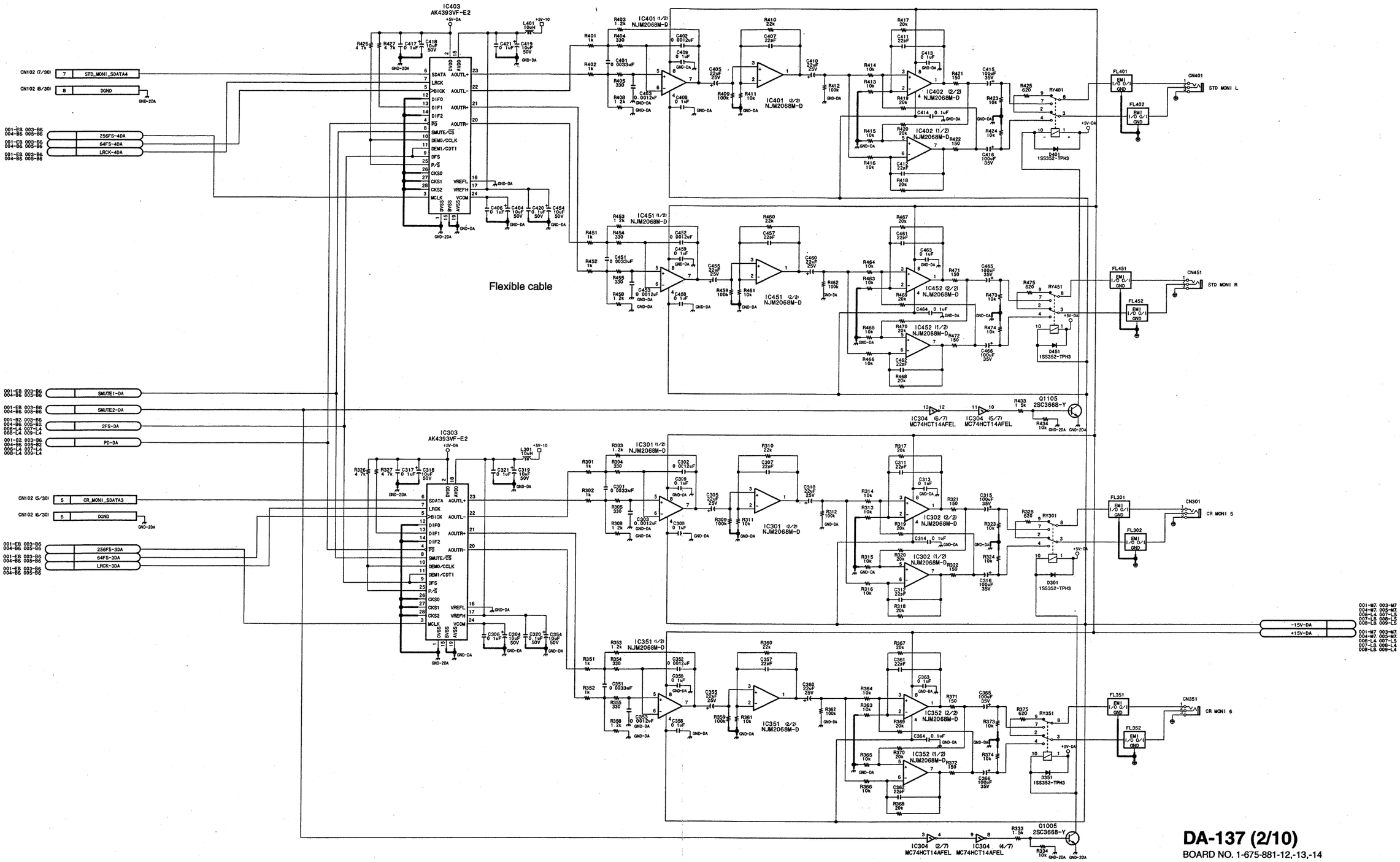

DA-137 (2/10)
BOARD NO. 1-675-881-12,-13,-14
GS-APX-397_DA-137_002_002

8-30 8-30

DMX-R100/V2

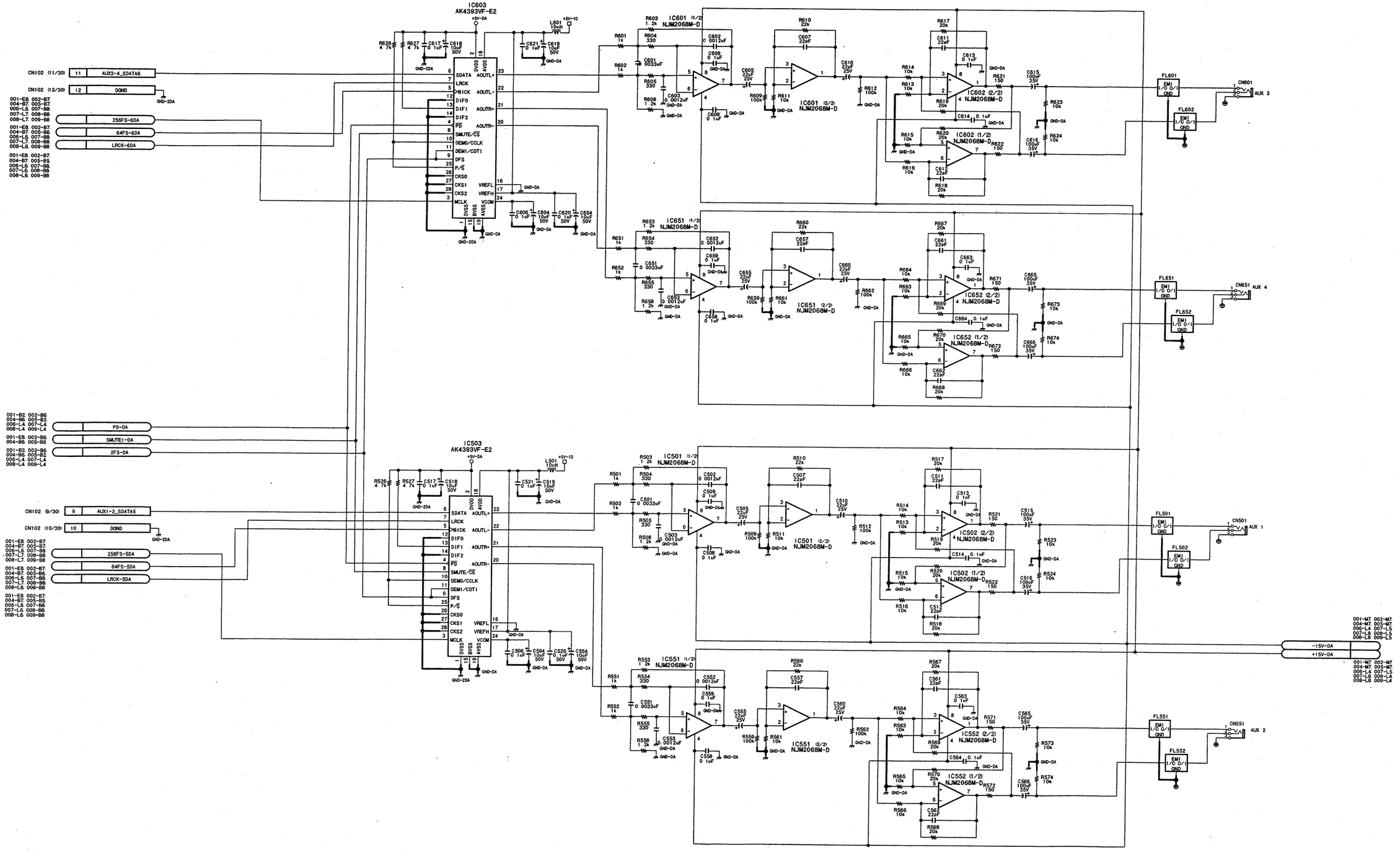

DA-137 (3/10)

BOARD NO. 1-675-881-12,-13,-14

GS-APX-397_DA-137_002_003

DMX-R100/V2

8-31 8-31

DA-137 (4/10)

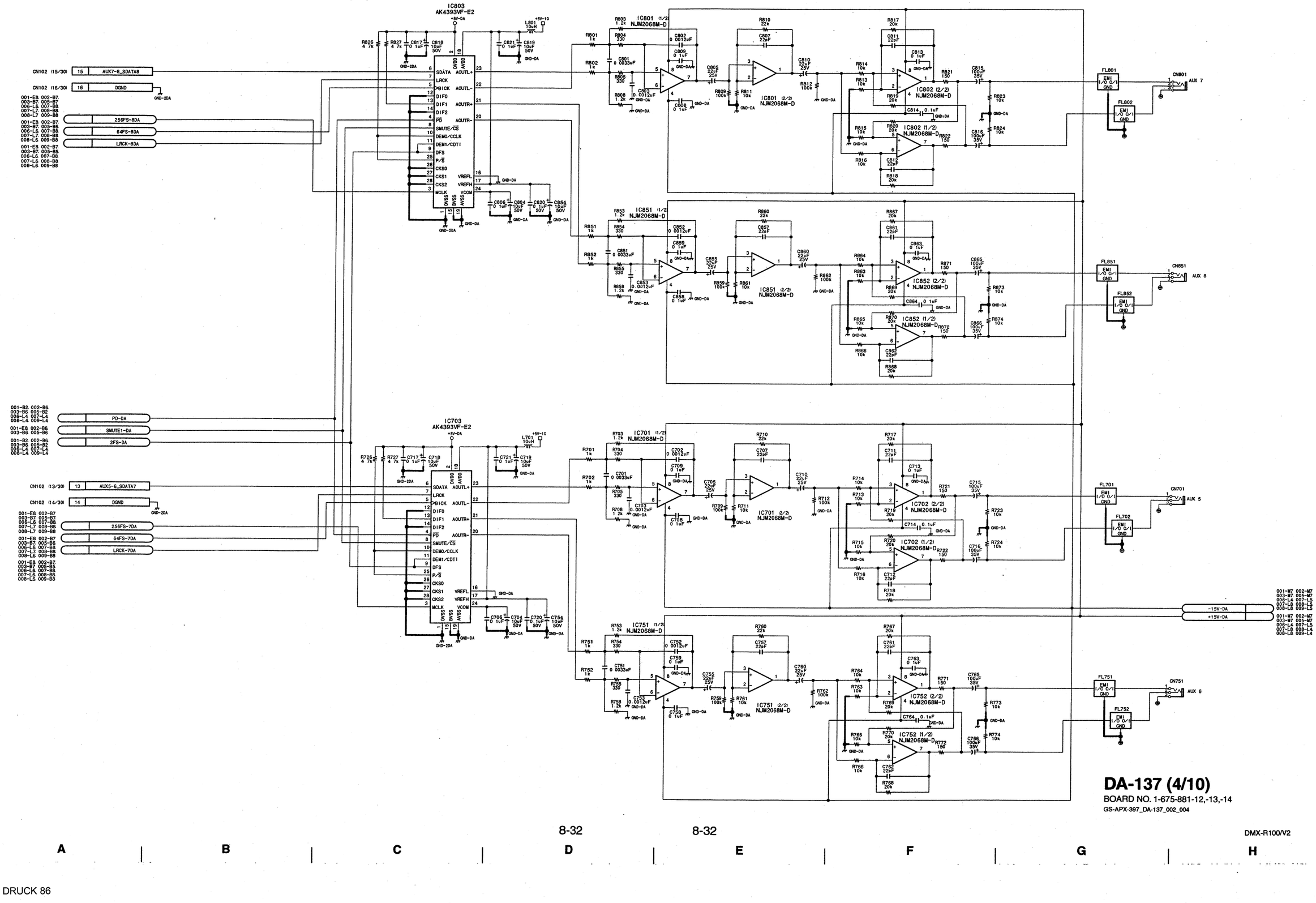

DA-137 (4/10)

BOARD NO. 1-675-881-12,-13,-14

GS-APX-397_DA-137_002_004

8-32 8-32

DMX-R100/V2

DA-137 (5/10)

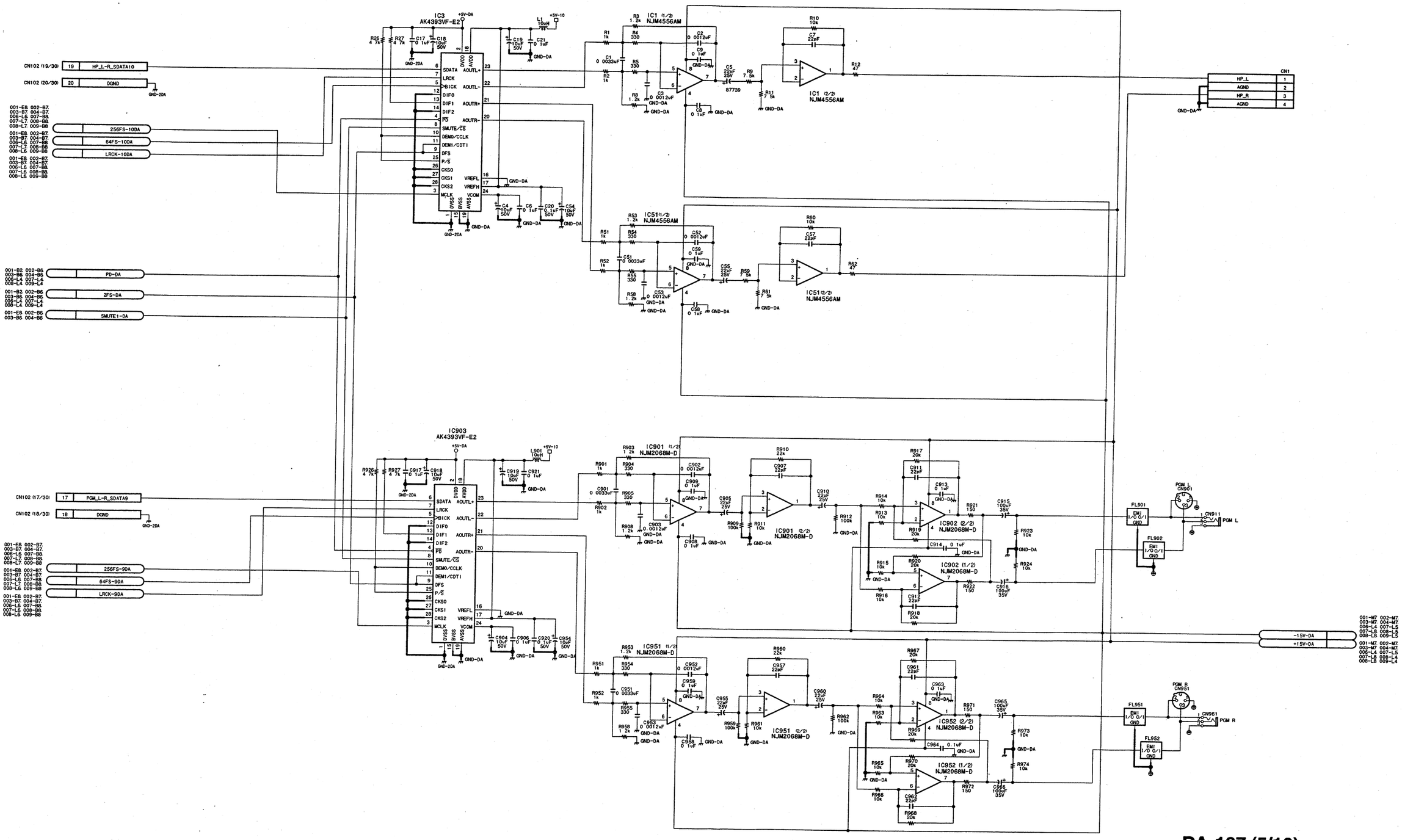

DA-137 (5/10)

BOARD NO. 1-675-881-12,-13,-14

GS-APX-397_DA-137_002_005

DMX-R100/V2

SONY-SP1439 / DRUCK 87

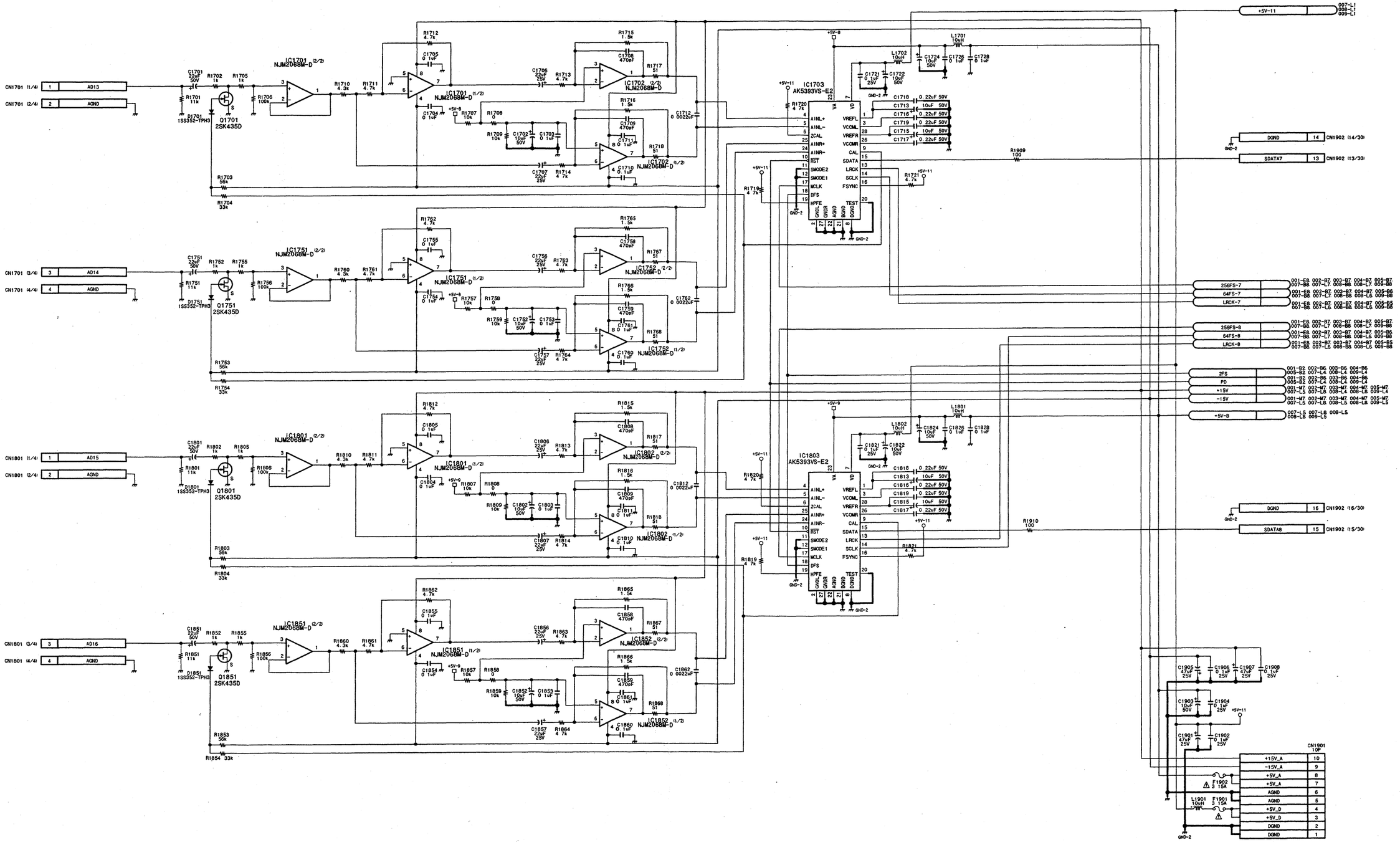

DA-137 (6/10)

BOARD NO. 1-675-881-12,-13,-14

GS-APX-397_DA-137_002_006

DA-137 (7/10)

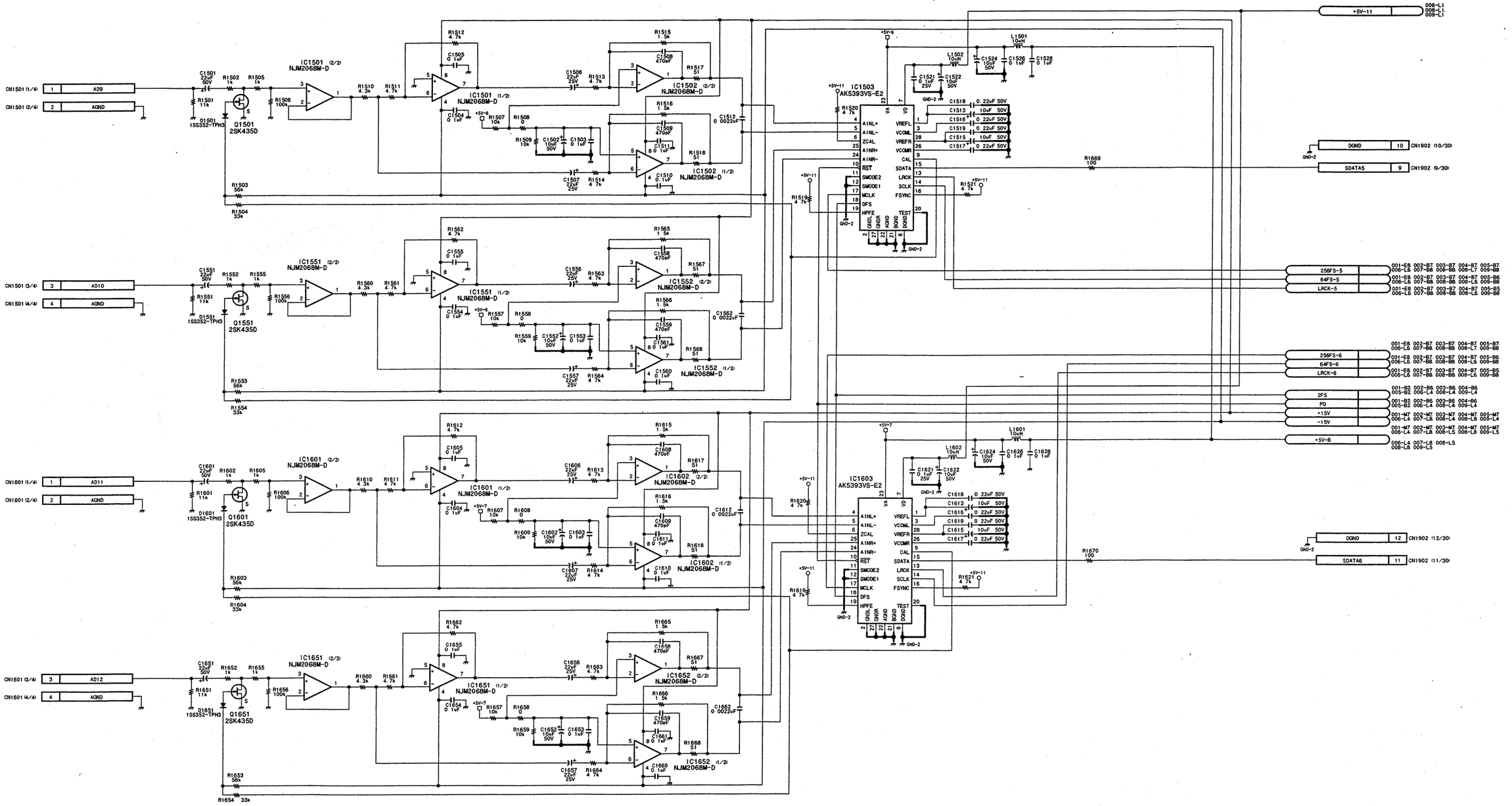

DA-137 (7/10)

BOARD NO. 1-675-881-12,-13,-14

GS-APX-397_DA-137_002_007

DA-137 (8/10)

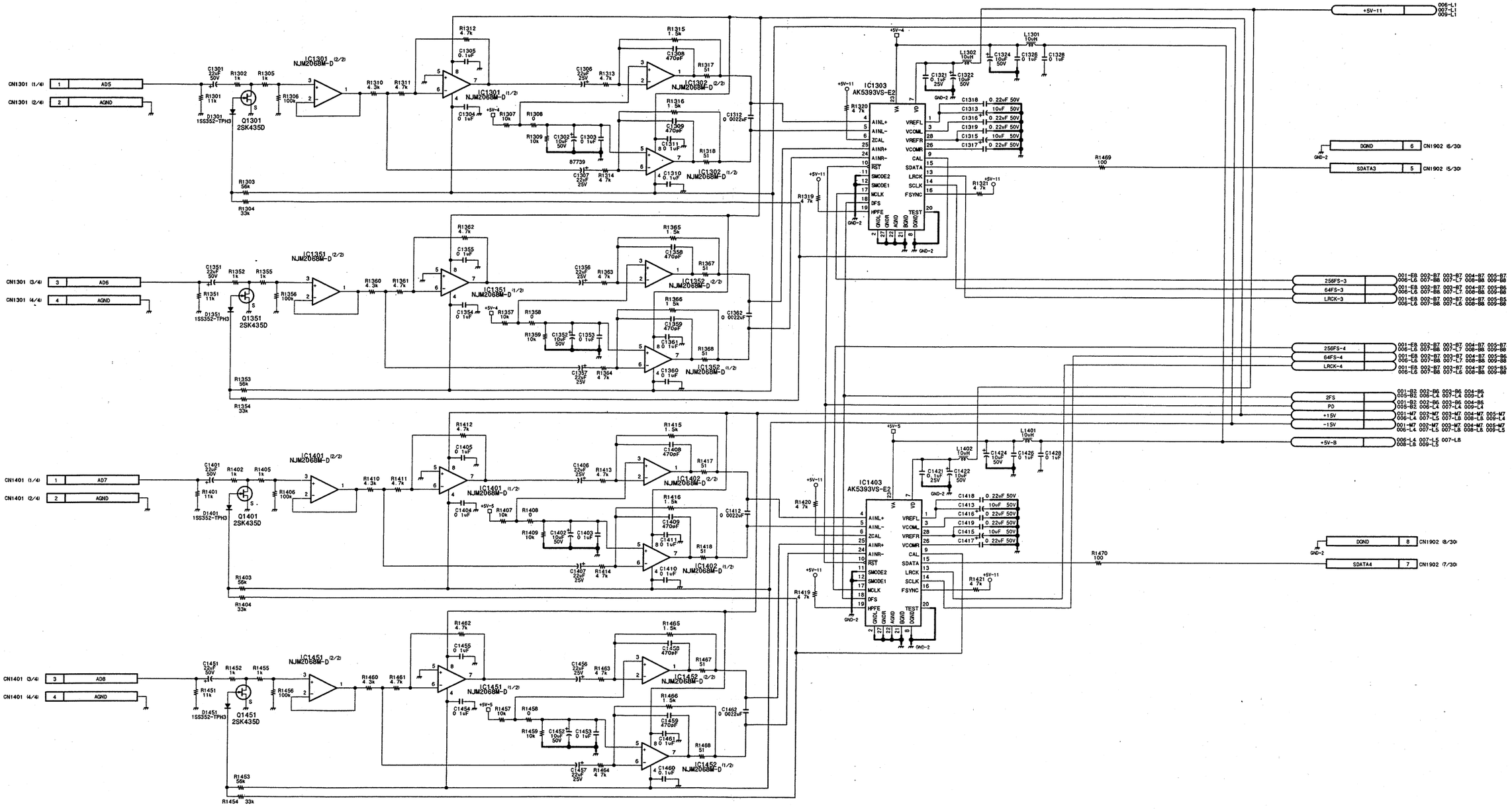

DA-137 (8/10)

BOARD NO. 1-675-881-12,-13,-14

GS-APX-397_DA-137_002_008

8-36 8-36

DMX-R100/V2

DA-137 (9/10)

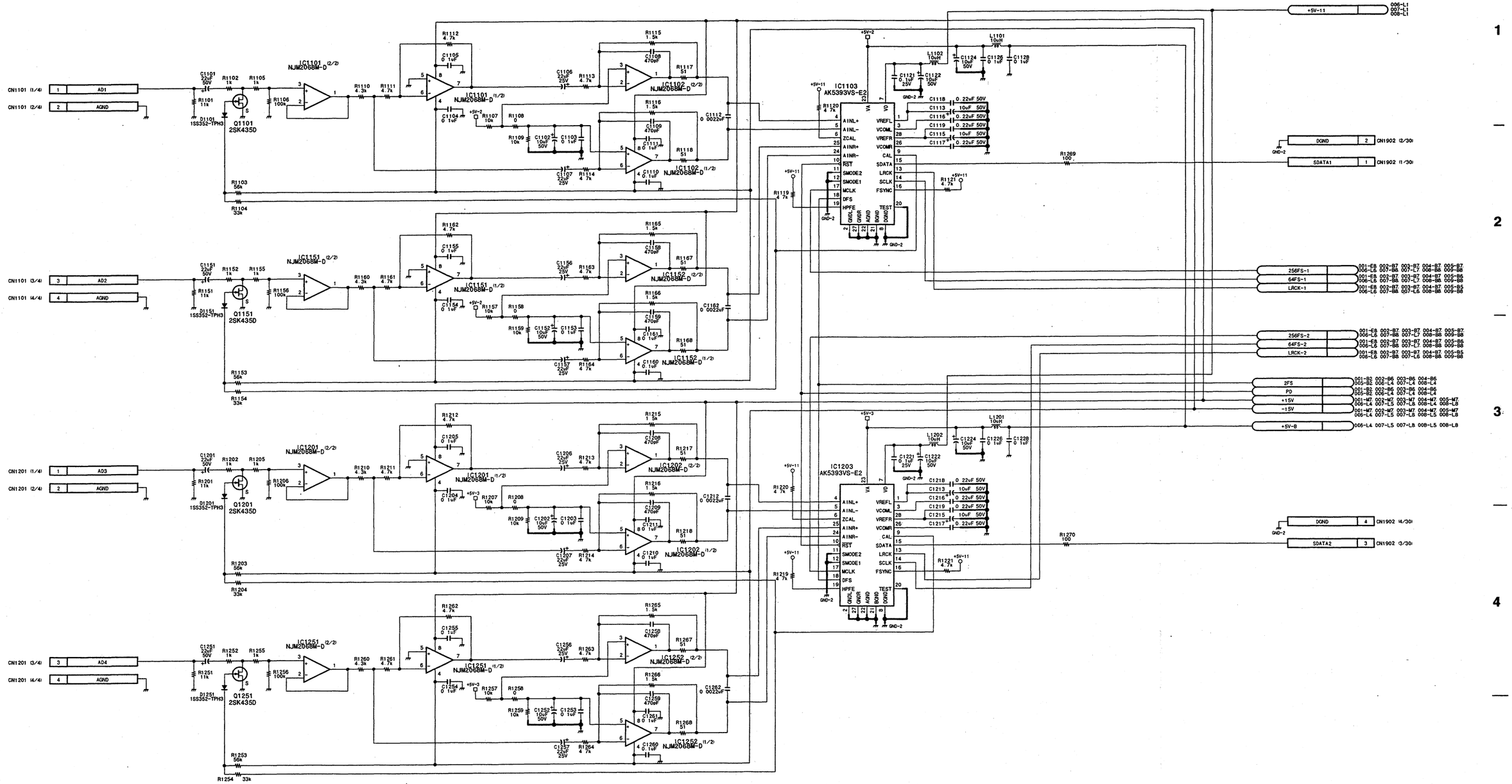

DA-137 (9/10)

BOARD NO. 1-675-881-12,-13,-14

GS-APX-397_DA-137_002_009

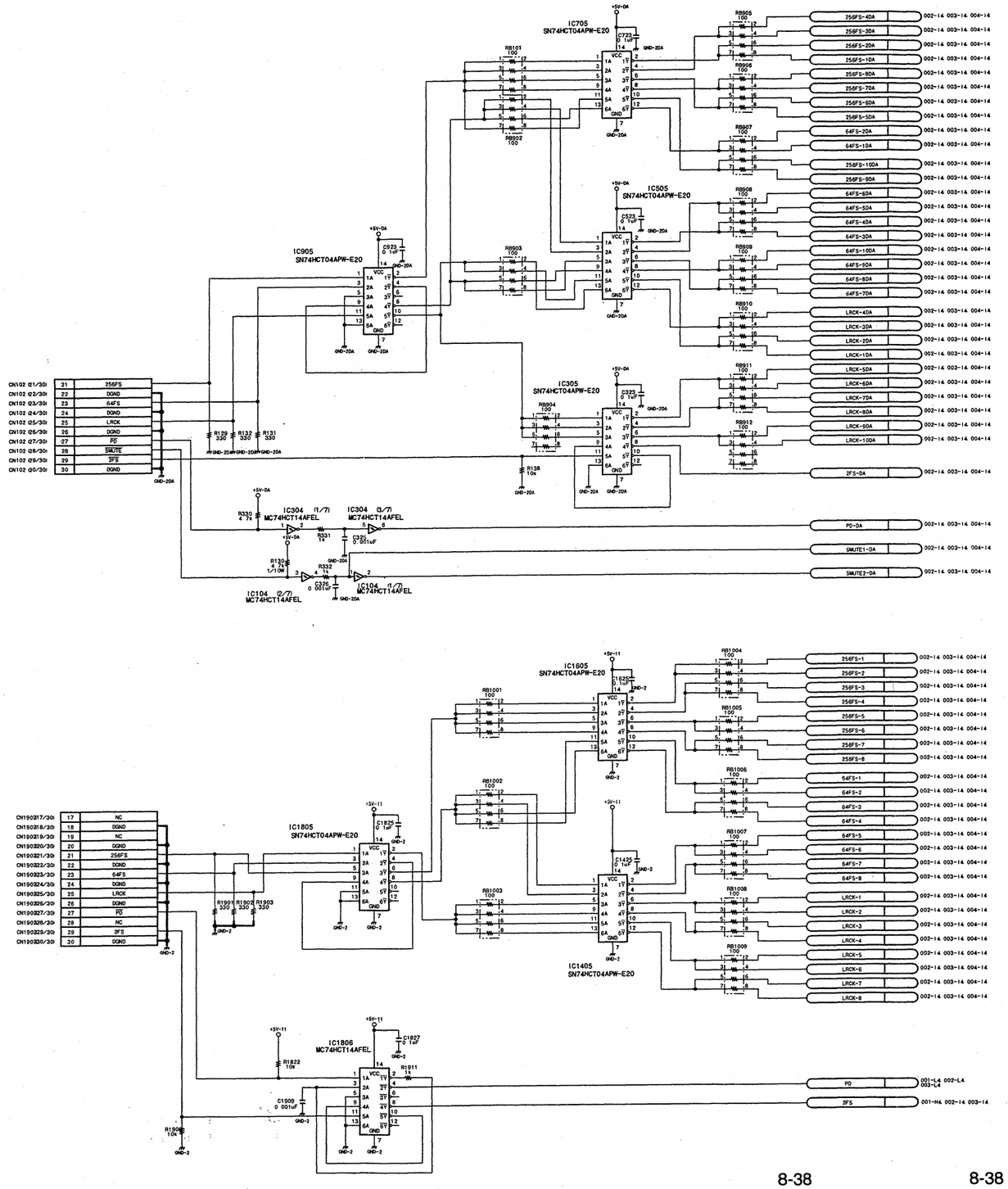

DA-137 (10/10)

BOARD NO. 1-675-881-12,-13,-14

GS-APX-397_DA-137_002_010

DMX-R100/V2

DC-102 (1/2)

DC-102 (1/2)

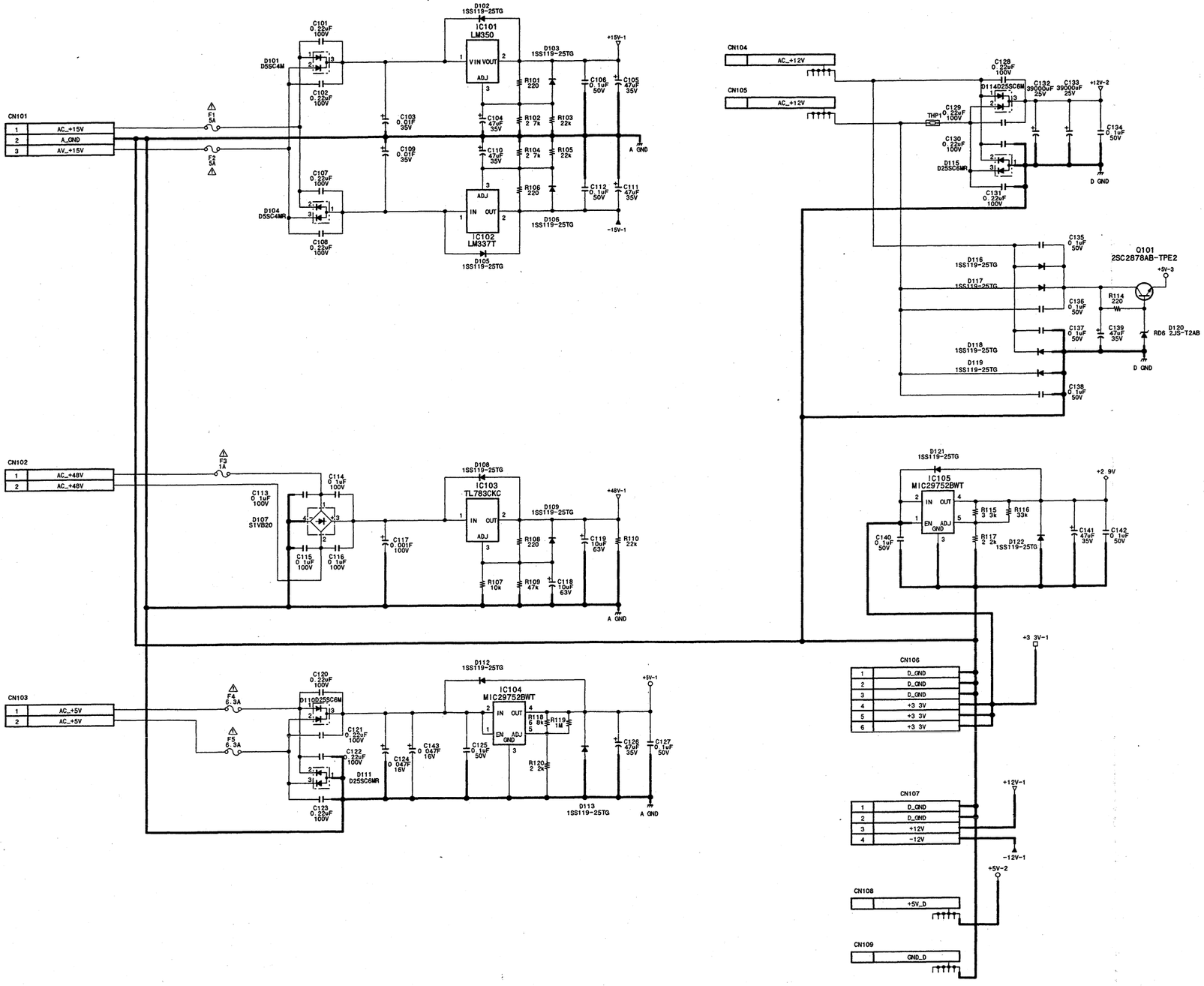

DC-102 (1/2)

BOARD NO. 1-675-888-12,-13

GS-APX-397_DC-102_002_001

DC-102 (2/2)

VH

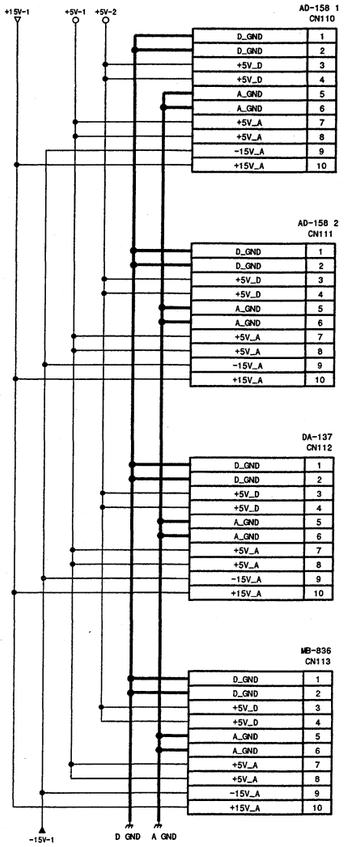

VH

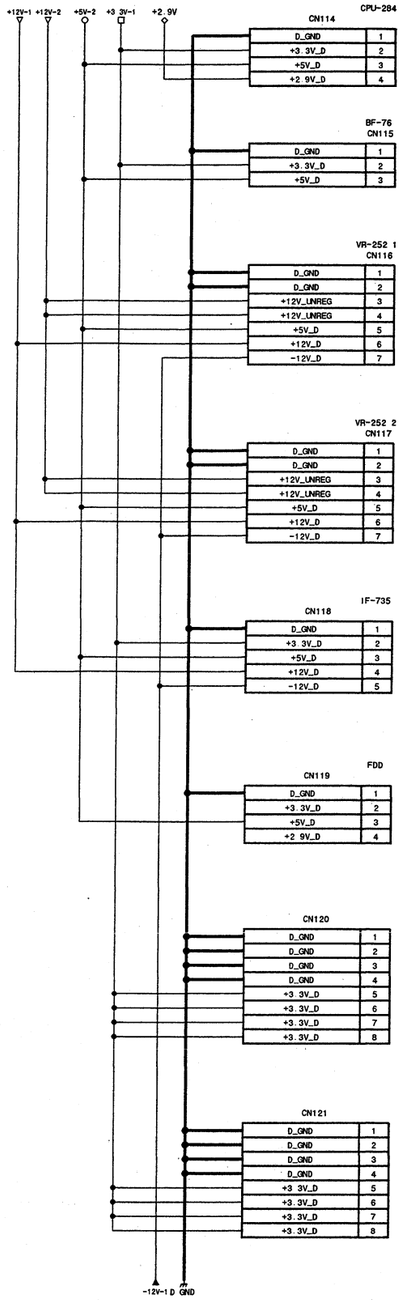

ELCO

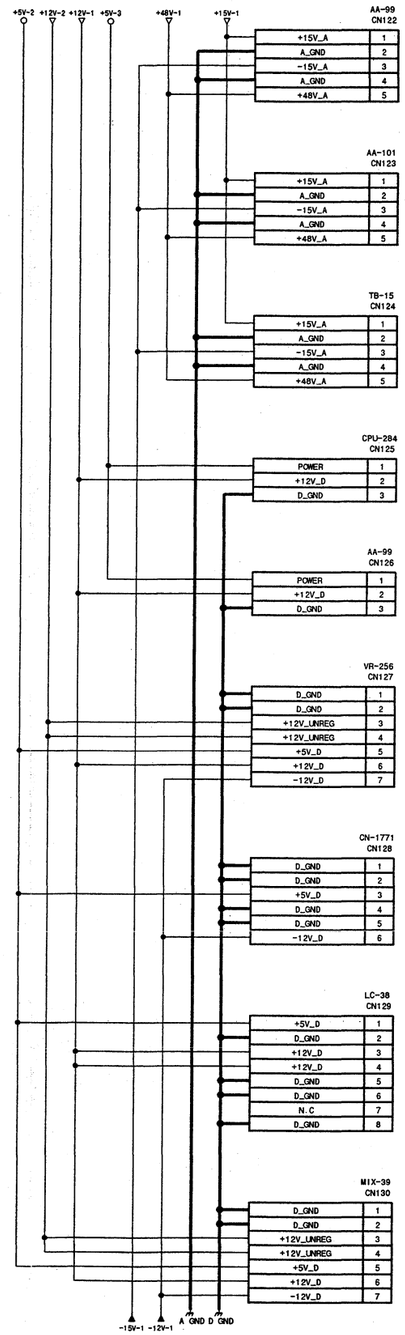

DC-102 (2/2)
BOARD NO. 1-675-888-12,-13
GS-APX-397_DC-102_002_002

IF-735 (2/12)

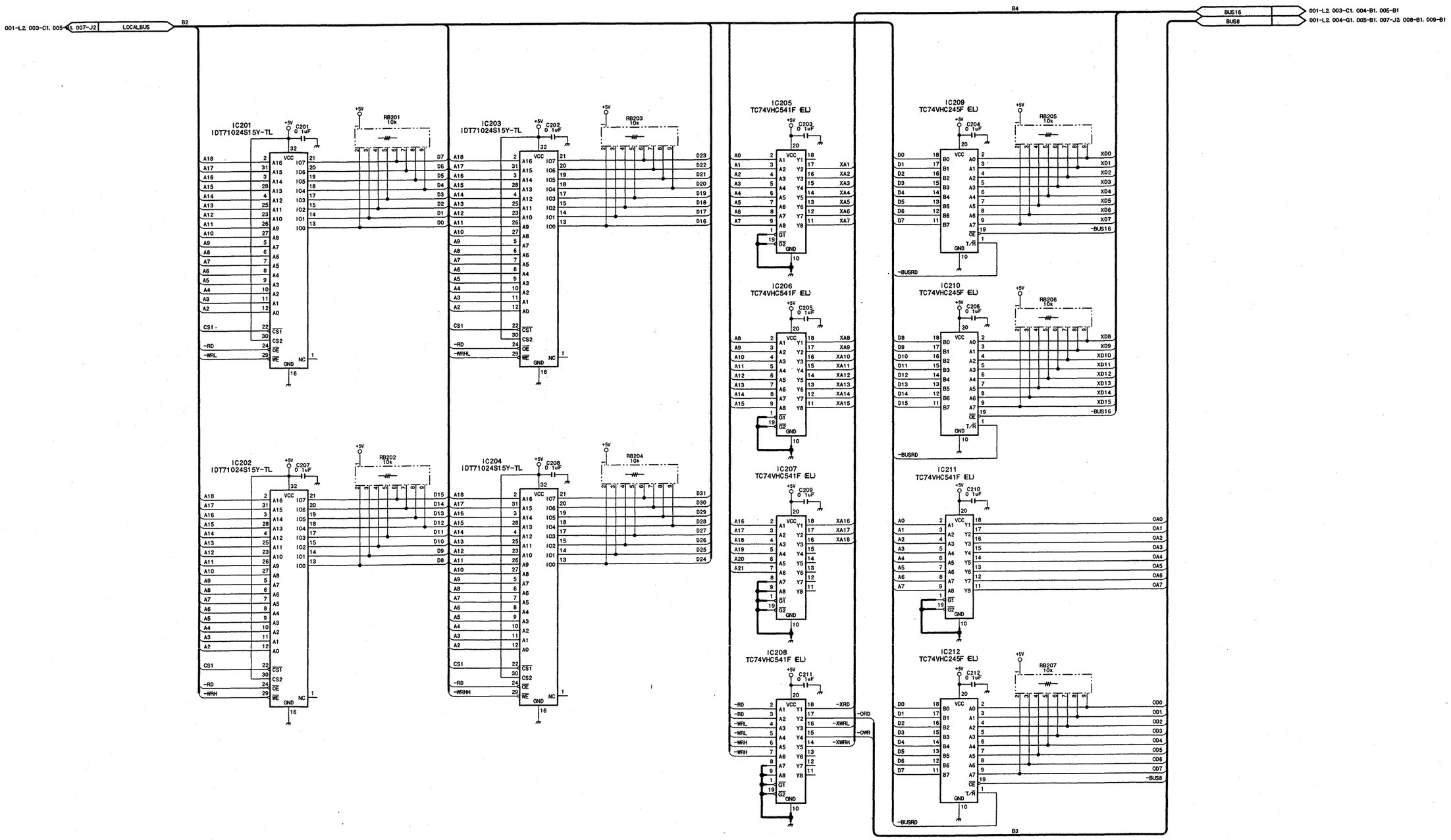

IF-735 (2/12)
BOARD NO. 1-675-884-11
GS-APX-397_IF-735_001_002

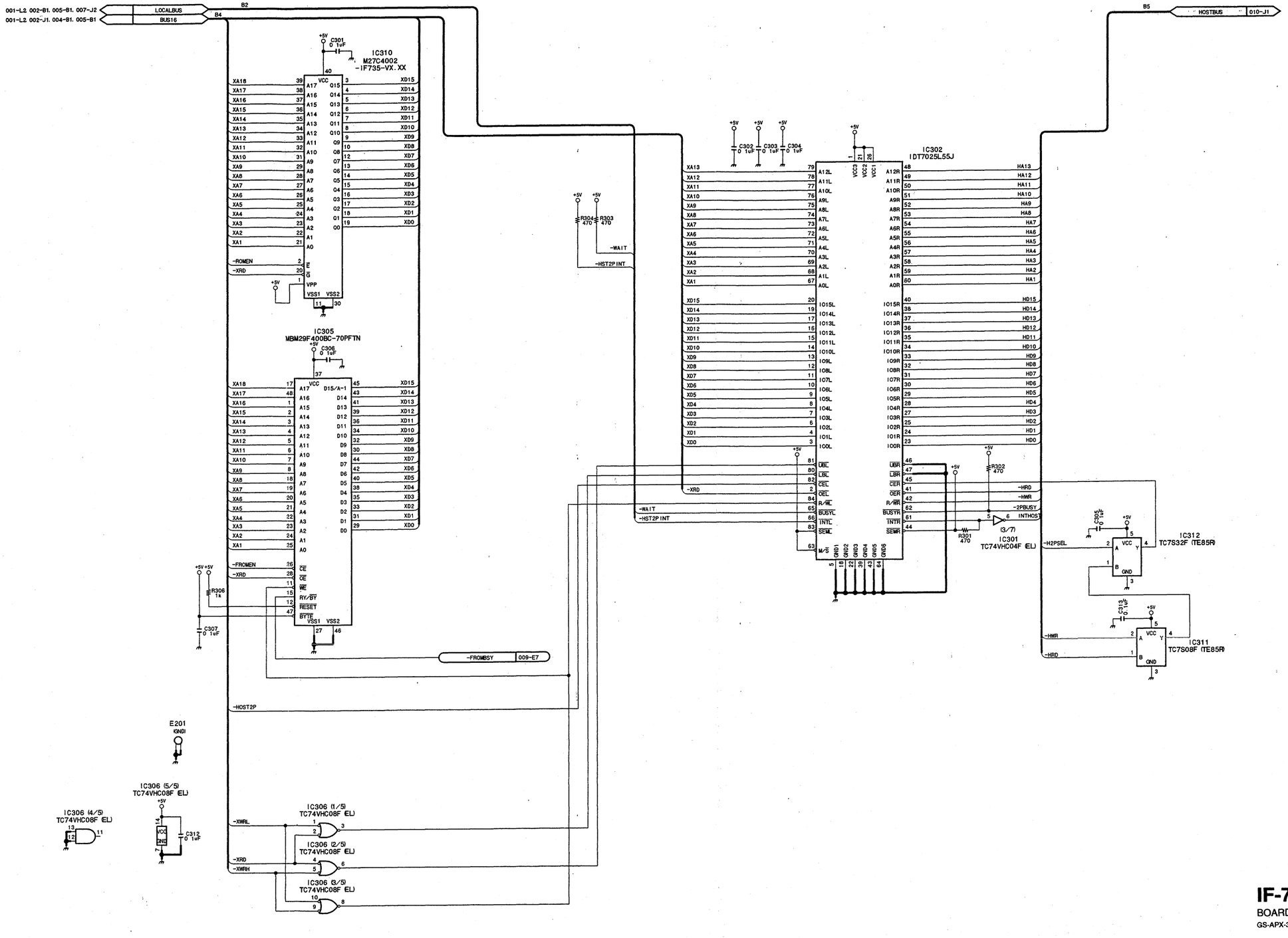

IF-735 (3/12)

BOARD NO. 1-675-884-11

GS-APX-397_IF-735_001_003

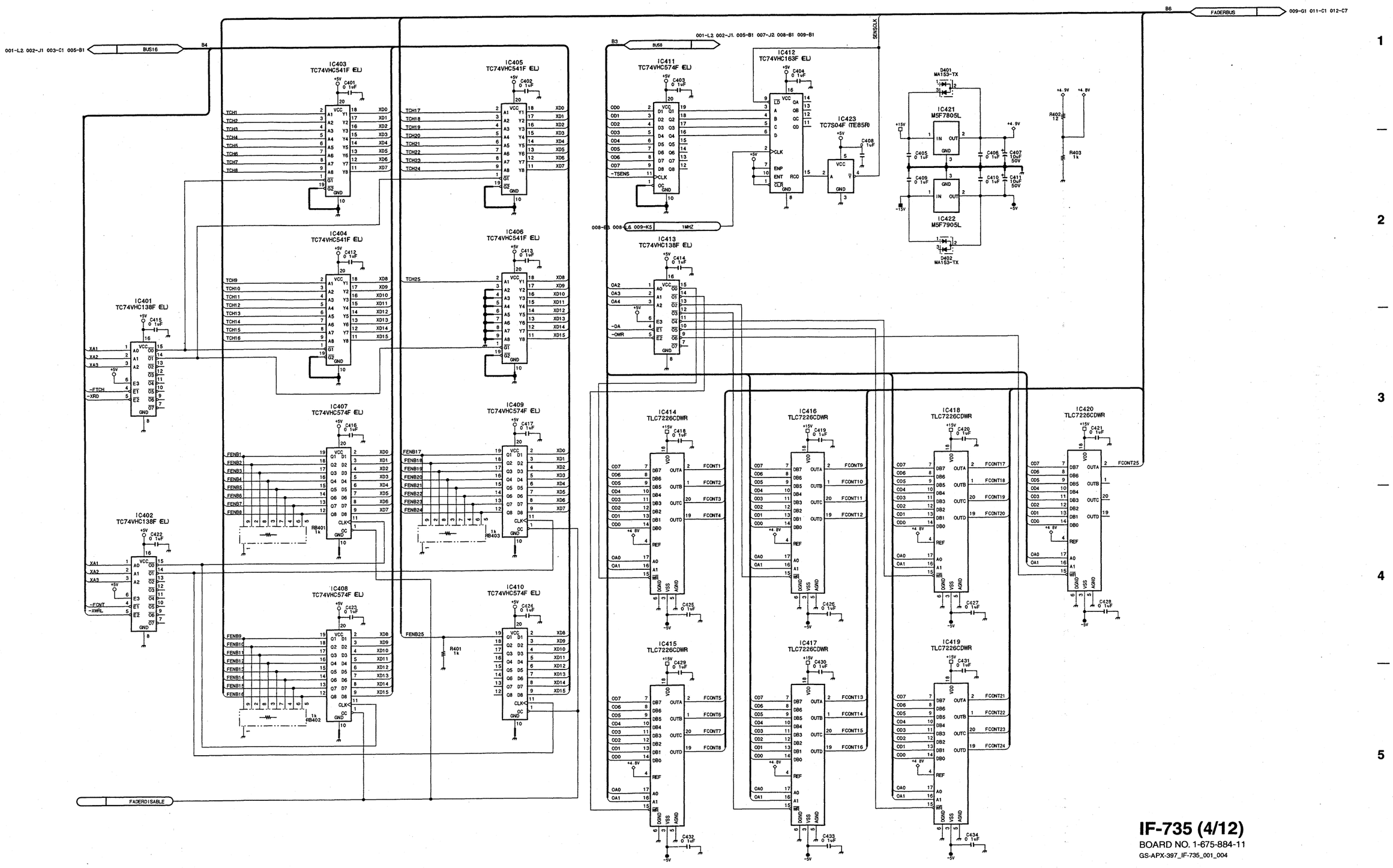

IF-735 (4/12)
BOARD NO. 1-675-884-11
GS-APX-397_IF-735_001_004

8-45 8-45

DMX-R100/V2

SONY-SP1439 / DRUCK 97

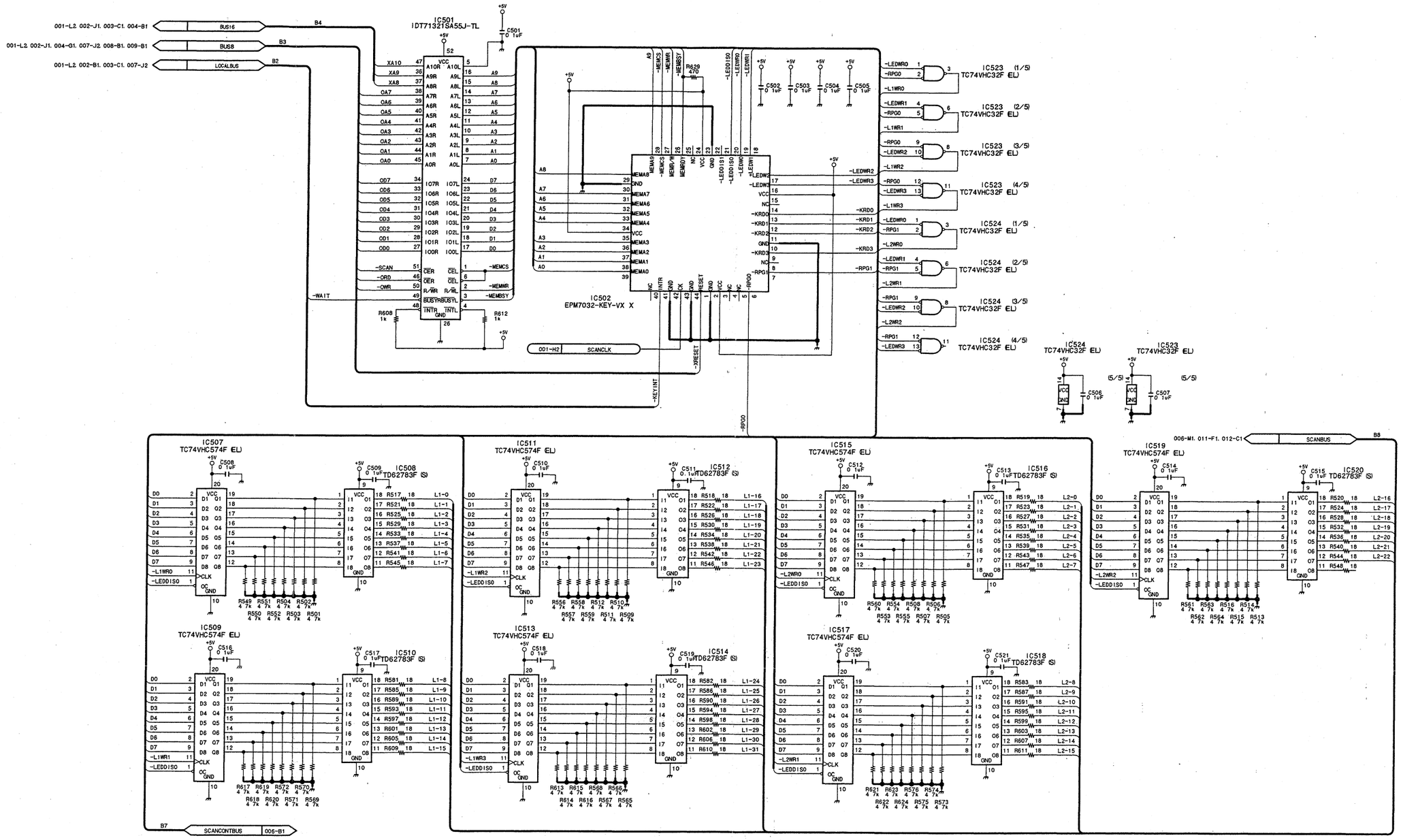

IF-735 (5/12)

BOARD NO. 1-675-884-11

GS-APX-397_IF-735_001_005

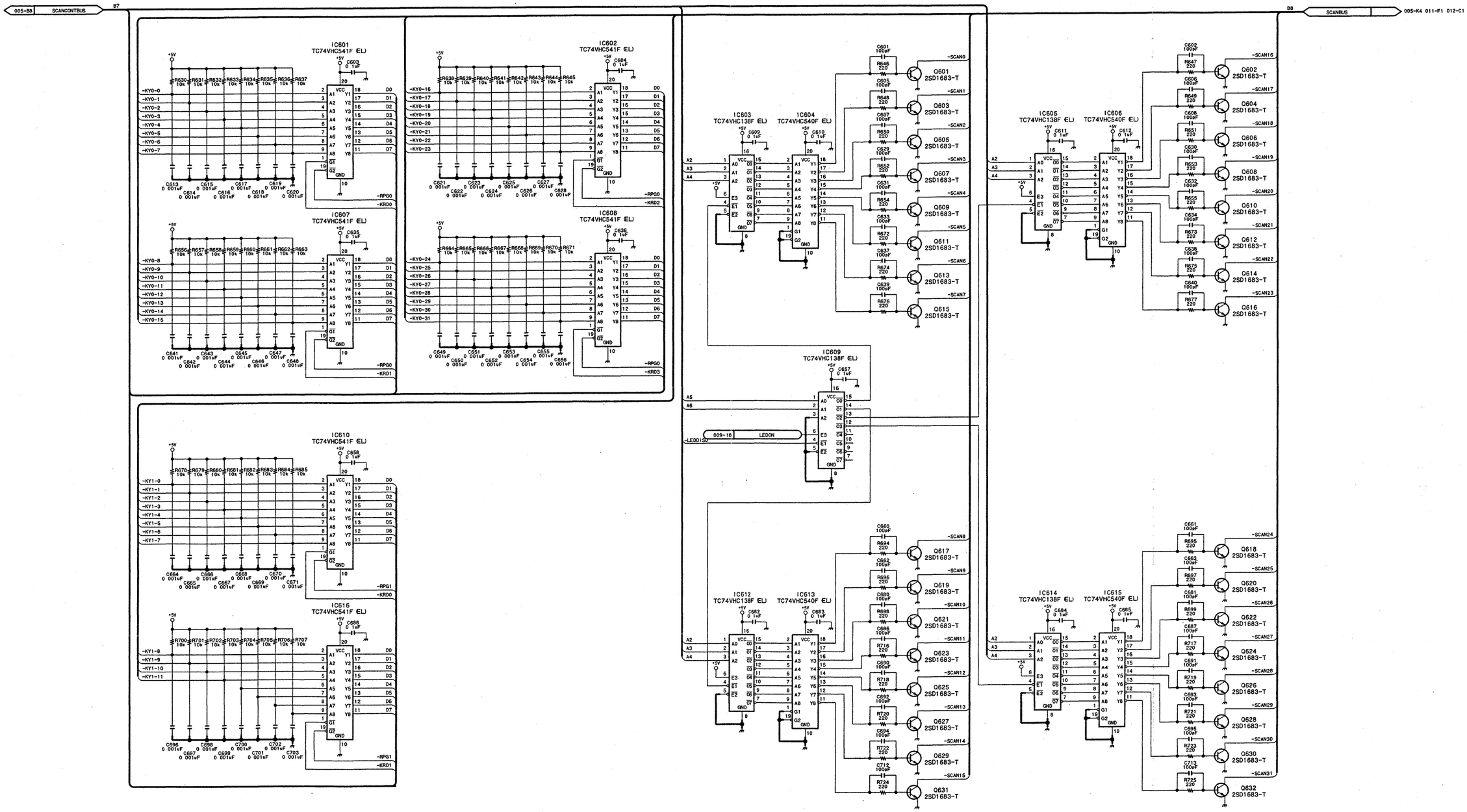

IF-735 (6/12)
BOARD NO. 1-675-884-11
GS-APX-397_IF-735_001_006

IF-735 (7/12)

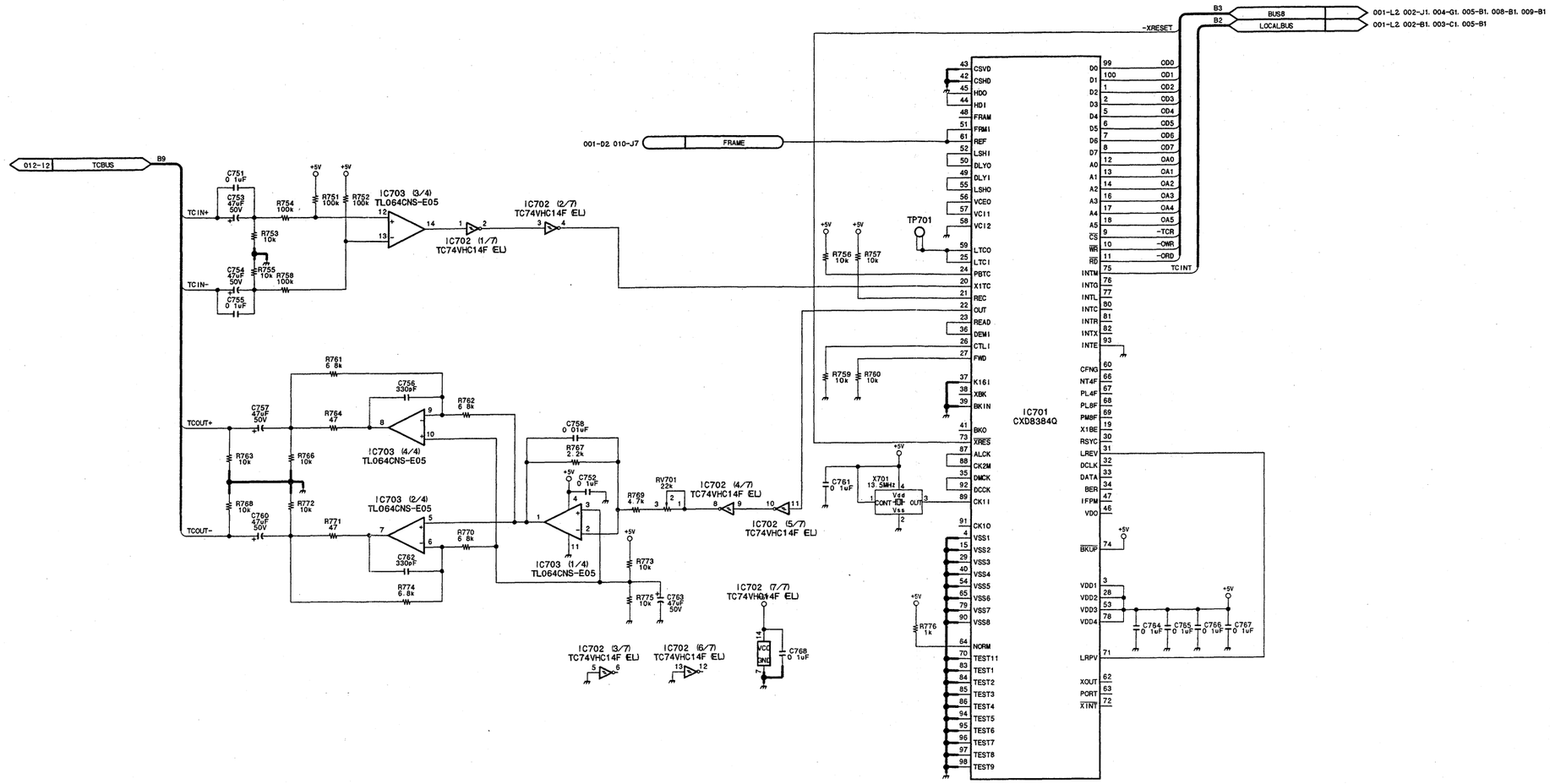

IF-735 (7/12)
BOARD NO. 1-675-884-11
GS-APX-397_IF-735_001_007

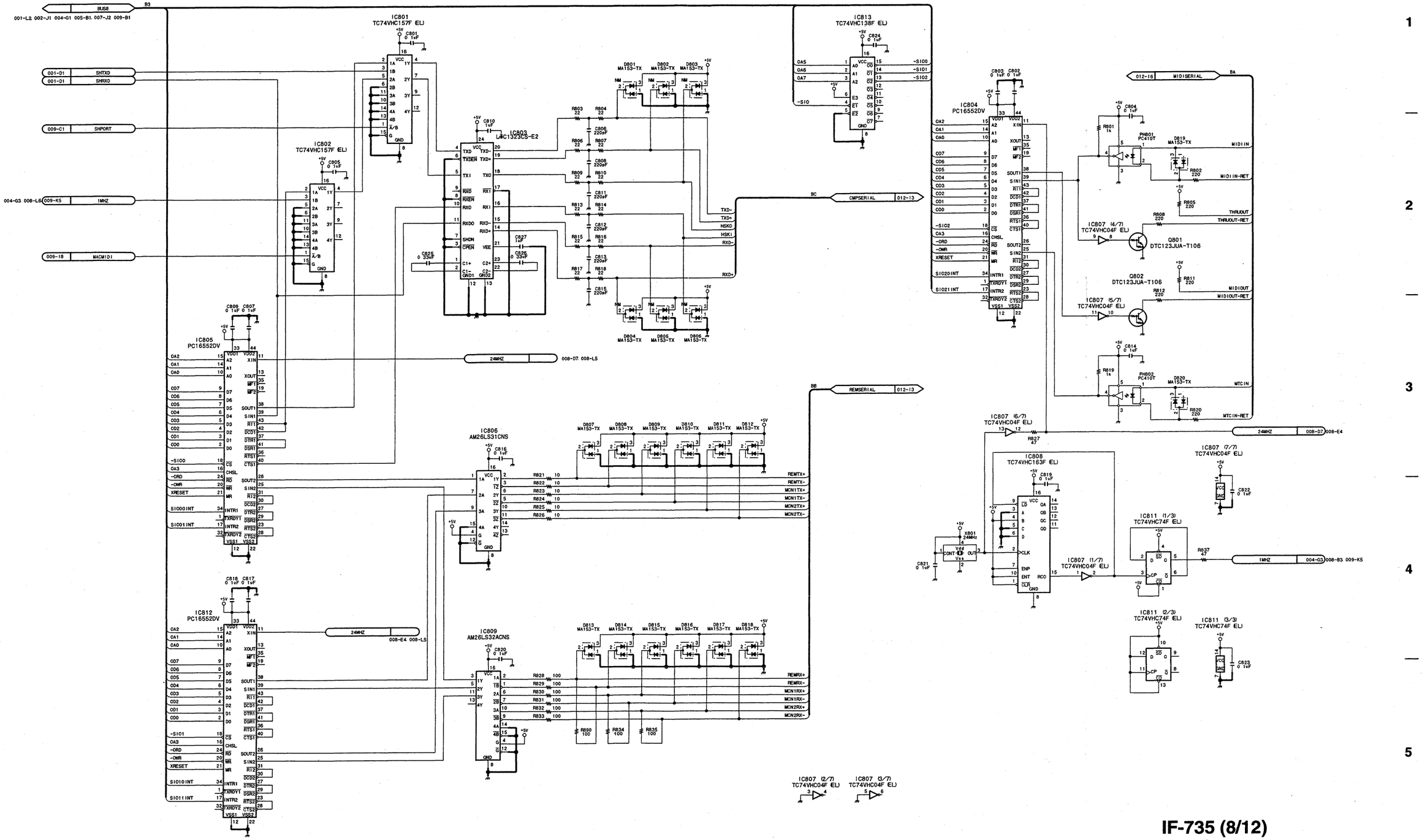

IF-735 (8/12)
BOARD NO. 1-675-884-11
GS-APX-397_IF-735_001_008

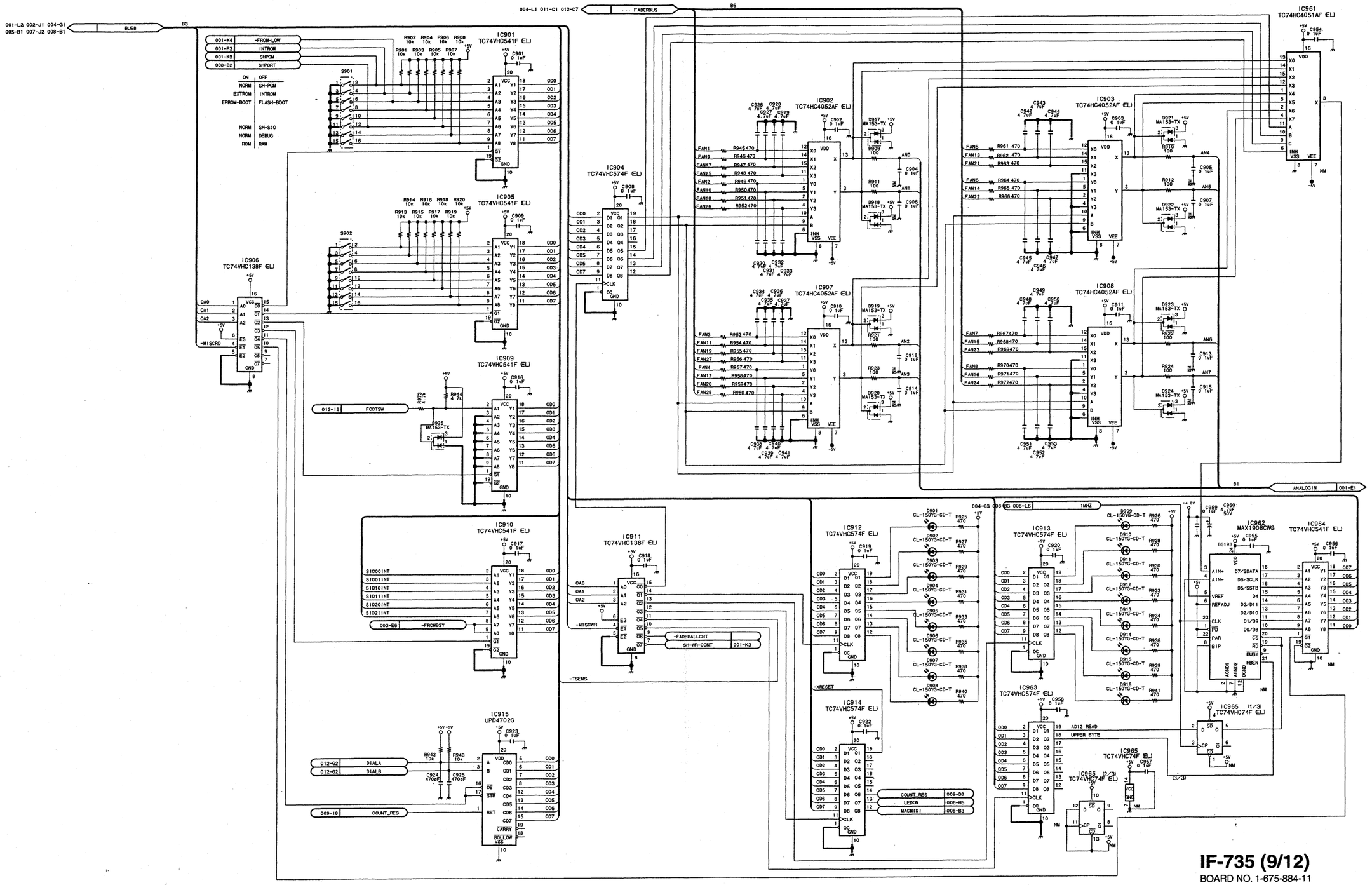

8-50 8-50

DMX-R100/V2

SONY-SP1439 / DRUCK 102

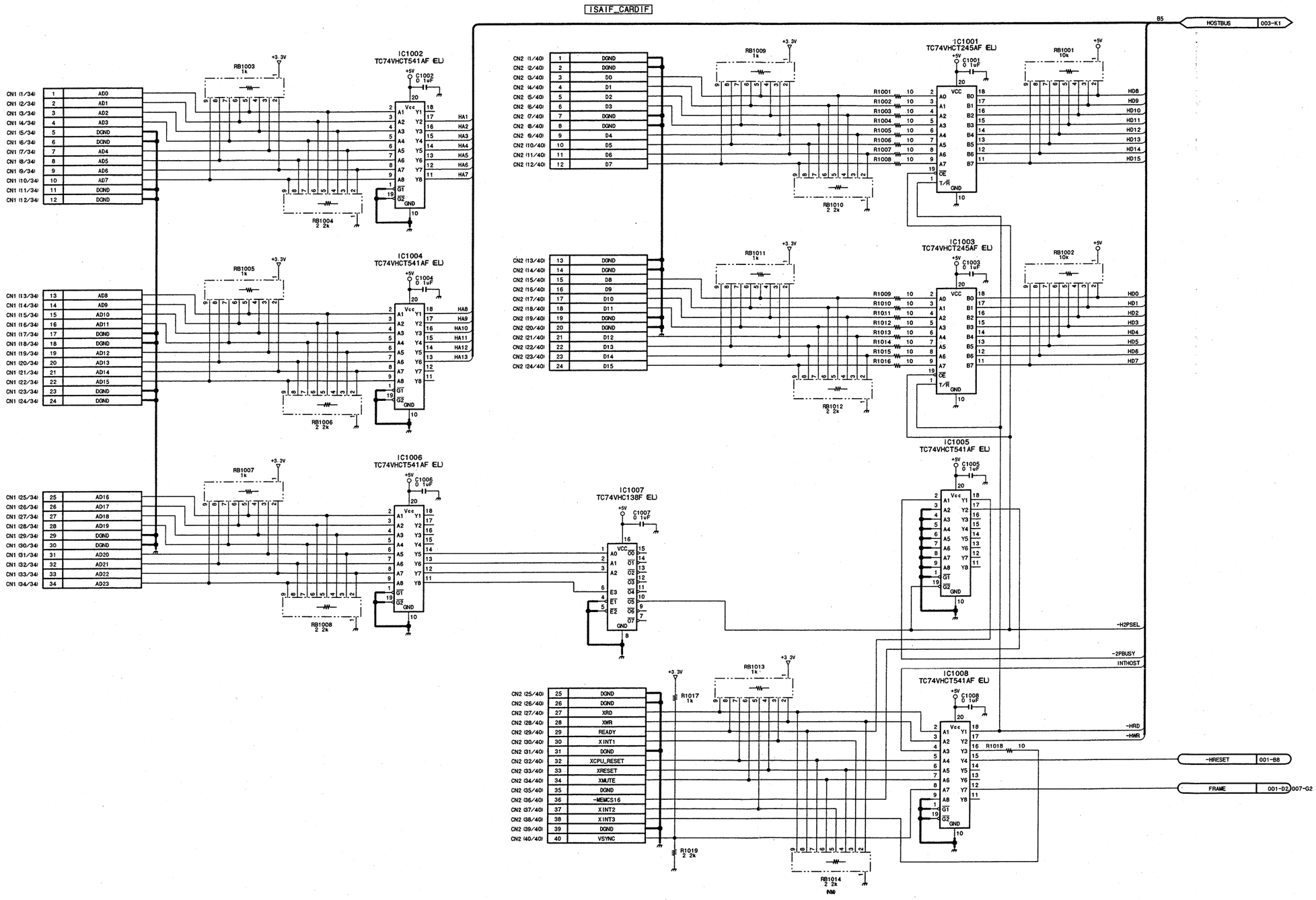

IF-735 (10/12)
BOARD NO. 1-675-884-11
GS-APX-397_IF-735_001_010

IF-735 (11/12)

004-L1, 009-G1, 012-C7 ← FADERBUS B6

005-K4, 006-M1, 012-C1 ← SCANBUS B8

VR252-CN5-CH1

CN1101

1	GND	SENSCLK
2	CLOCK	FCONT1
3	CONT-1	FAN1
4	POS-1	TCH1
5	TOUCH-1	FENB1
6	ENAB-1	
7	REF	FCONT2
8	CONT-2	FAN2
9	POS-2	TCH2
10	TOUCH-2	FENB2
11	ENAB-2	
12	GND	FCONT3
13	CONT-3	FAN3
14	POS-3	TCH3
15	TOUCH-3	FENB3
16	ENAB-3	
17	REF	FCONT4
18	CONT-4	FAN4
19	POS-4	TCH4
20	TOUCH-4	FENB4
21	ENAB-4	
22	GND	FCONT5
23	CONT-5	FAN5
24	POS-5	TCH5
25	TOUCH-5	FENB5
26	ENAB-5	
27	REF	FCONT6
28	CONT-6	FAN6
29	POS-6	TCH6
30	TOUCH-6	FENB6
31	ENAB-6	FCONT7
32	CONT-7	FAN7
33	POS-7	

+4.9V

VR252-CN5-CH13

CN1103

1	GND	SENSCLK
2	CLOCK	FCONT13
3	CONT-13	FAN13
4	POS-13	TCH13
5	TOUCH-13	FENB13
6	ENAB-13	
7	REF	FCONT14
8	CONT-14	FAN14
9	POS-14	TCH14
10	TOUCH-14	FENB14
11	ENAB-14	
12	GND	FCONT15
13	CONT-15	FAN15
14	POS-15	TCH15
15	TOUCH-15	FENB15
16	ENAB-15	
17	REF	FCONT16
18	CONT-16	FAN16
19	POS-16	TCH16
20	TOUCH-16	FENB16
21	ENAB-16	
22	GND	FCONT17
23	CONT-17	FAN17
24	POS-17	TCH17
25	TOUCH-17	FENB17
26	ENAB-17	
27	REF	FCONT18
28	CONT-18	FAN18
29	POS-18	TCH18
30	TOUCH-18	FENB18
31	ENAB-18	FCONT19
32	CONT-19	FAN19
33	POS-19	

+4.9V

VR252-CN4-CH1

CN1102

1	TOUCH-7	TCH7
2	ENAB-7	FENB7
3	REF	FCONT8
4	CONT-8	FAN8
5	POS-8	TCH8
6	TOUCH-8	FENB8
7	ENAB-8	
8	GND	FCONT9
9	CONT-9	FAN9
10	POS-9	TCH9
11	TOUCH-9	FENB9
12	ENAB-9	
13	REF	FCONT10
14	CONT-10	FAN10
15	POS-10	TCH10
16	TOUCH-10	FENB10
17	ENAB-10	
18	GND	FCONT11
19	CONT-11	FAN11
20	POS-11	TCH11
21	TOUCH-11	FENB11
22	ENAB-11	
23	REF	FCONT12
24	CONT-12	FAN12
25	POS-12	TCH12
26	TOUCH-12	FENB12
27	ENAB-12	
28	GND	
29	CONT-NC	
30	POS-NC	
31	TOUCH-NC	
32	ENAB-13	
33	GND	

+4.9V

VR252-CN4-CH13

CN1104

1	TOUCH-19	TCH19
2	ENAB-19	FENB19
3	REF	FCONT20
4	CONT-20	FAN20
5	POS-20	TCH20
6	TOUCH-20	FENB20
7	ENAB-20	
8	GND	FCONT21
9	CONT-21	FAN21
10	POS-21	TCH21
11	TOUCH-21	FENB21
12	ENAB-21	
13	REF	FCONT22
14	CONT-22	FAN22
15	POS-22	TCH22
16	TOUCH-22	FENB22
17	ENAB-22	
18	GND	FCONT23
19	CONT-23	FAN23
20	POS-23	TCH23
21	TOUCH-23	FENB23
22	ENAB-23	
23	REF	FCONT24
24	CONT-24	FAN24
25	POS-24	TCH24
26	TOUCH-24	FENB24
27	ENAB-24	
28	GND	FCONT25
29	CONT-M	FAN25
30	POS-M	TCH25
31	TOUCH-M	FENB25
32	ENAB-M	
33	GND	

+4.9V

FP116-CH1

CN1105

1	NC	-KY1-11
2	DB11	-KY1-10
3	DB10	-KY1-9
4	DB9	-KY1-8
5	DB8	-KY1-7
6	DB7	-KY1-6
7	DB6	-KY1-5
8	DB5	-KY1-4
9	DB4	-KY1-3
10	DB3	-KY1-2
11	DB2	-KY1-1
12	DB1	-KY1-0
13	DB0	L1-19
14	SRC19	L1-18
15	SRC18	L1-17
16	SRC17	L1-16
17	SRC16	-KY0-19
18	DA19	-KY0-18
19	DA18	-KY0-17
20	DA17	-KY0-16
21	DA16	-SCAN21
22	SCAN21	-SCAN20
23	SCAN20	-SCAN11
24	SCAN11	-SCAN10
25	SCAN10	-SCAN9
26	SCAN9	-SCAN8
27	SCAN8	-SCAN7
28	SCAN7	-SCAN6
29	SCAN6	-SCAN5
30	SCAN5	-SCAN4
31	SCAN4	-SCAN3
32	SCAN3	-SCAN2
33	SCAN2	-SCAN1
34	SCAN1	-SCAN0
35	SCAN0	

FP116-CH13

CN1106

1	NC	-KY1-11
2	DB11	-KY1-10
3	DB10	-KY1-9
4	DB9	-KY1-8
5	DB8	-KY1-7
6	DB7	-KY1-6
7	DB6	-KY1-5
8	DB5	-KY1-4
9	DB4	-KY1-3
10	DB3	-KY1-2
11	DB2	-KY1-1
12	DB1	-KY1-0
13	DB0	L1-19
14	SRC19	L1-18
15	SRC18	L1-17
16	SRC17	L1-16
17	SRC16	-KY0-19
18	DA19	-KY0-18
19	DA18	-KY0-17
20	DA17	-KY0-16
21	DA16	-SCAN23
22	SCAN23	-SCAN22
23	SCAN22	-SCAN23
24	SCAN23	-SCAN22
25	SCAN22	-SCAN21
26	SCAN21	-SCAN20
27	SCAN20	-SCAN19
28	SCAN19	-SCAN18
29	SCAN18	-SCAN17
30	SCAN17	-SCAN16
31	SCAN16	-SCAN15
32	SCAN15	-SCAN14
33	SCAN14	-SCAN13
34	SCAN13	-SCAN12
35	SCAN12	

MT BUS

CN1111

1	SCAN0	-SCAN0
2	SCAN1	-SCAN1
3	SCAN2	-SCAN2
4	SCAN3	-SCAN3
5	SCAN4	-SCAN4
6	SCAN5	-SCAN5
7	SCAN6	-SCAN6
8	SCAN7	-SCAN7
9	SCAN8	-SCAN8
10	SCAN9	-SCAN9
11	SCAN10	-SCAN10
12	SCAN11	-SCAN11
13	SCAN12	-SCAN12
14	SCAN13	-SCAN13
15	SCAN14	-SCAN14
16	SCAN15	-SCAN15
17	SCAN16	-SCAN16
18	SCAN17	-SCAN17
19	SCAN18	-SCAN18
20	SCAN19	-SCAN19
21	SCAN20	-SCAN20
22	SCAN21	-SCAN21
23	SCAN22	-SCAN22
24	SCAN23	-SCAN23
25	SCAN24	-SCAN24
26	SCAN25	-SCAN25
27	SCAN26	-SCAN26
28	SCAN27	-SCAN27
29	SCAN28	-SCAN28
30	SCAN29	-SCAN29
31	SCAN30	-SCAN30
32	SCAN31	-SCAN31
33	SRC0	L2-0
34	SRC1	L2-1
35	SRC2	L2-2
36	SRC3	L2-3
37	SRC4	L2-4
38	SRC5	L2-5
39	SRC6	L2-6
40	SRC7	L2-7
41	SRC8	L2-8
42	SRC9	L2-9
43	SRC10	L2-10
44	SRC11	L2-11
45	SRC12	L2-12
46	SRC13	L2-13
47	SRC14	L2-14
48	SRC15	L2-15
49	SRC16	L2-16
50	SRC17	L2-17
51	SRC18	L2-18
52	SRC19	L2-19
53	SRC20	L2-20
54	SRC21	L2-21
55	SRC22	L2-22
56		
57		
58		
59		
60		

LED332-CN2-CH1

CN1107

1	SRC0	L1-0
2	SRC1	L1-1
3	SRC2	L1-2
4	SRC3	L1-3
5	SRC4	L1-4
6	SRC5	L1-5
7	SRC6	L1-6
8	SRC7	L1-7
9	SRC8	L1-8
10	SRC9	L1-9
11	SRC10	L1-10
12	SRC11	L1-11
13	SRC12	L1-12
14	SRC13	L1-13

16 15

LED332-CN2-CH13

CN1109

1	SRC0	L1-0
2	SRC1	L1-1
3	SRC2	L1-2
4	SRC3	L1-3
5	SRC4	L1-4
6	SRC5	L1-5
7	SRC6	L1-6
8	SRC7	L1-7
9	SRC8	L1-8
10	SRC9	L1-9
11	SRC10	L1-10
12	SRC11	L1-11
13	SRC12	L1-12
14	SRC13	L1-13

16 15

LED332-CN1-CH1

CN1108

1	SCAN0	-SCAN0
2	SCAN1	-SCAN1
3	SCAN2	-SCAN2
4	SCAN3	-SCAN3
5	SCAN4	-SCAN4
6	SCAN5	-SCAN5
7	SCAN6	-SCAN6
8	SCAN7	-SCAN7
9	SCAN8	-SCAN8
10	SCAN9	-SCAN9
11	SCAN10	-SCAN10
12	SCAN11	-SCAN11
13		
14	SRC14	L1-14

16 15

LED332-CN1-CH13

CN1110

1	SCAN12	-SCAN12
2	SCAN13	-SCAN13
3	SCAN14	-SCAN14
4	SCAN15	-SCAN15
5	SCAN16	-SCAN16
6	SCAN17	-SCAN17
7	SCAN18	-SCAN18
8	SCAN19	-SCAN19
9	SCAN20	-SCAN20
10	SCAN921	-SCAN21
11	SCAN22	-SCAN22
12	SCAN23	-SCAN23
13		
14	SRC14	L1-14

16 15

IF-735 (11/12)

BOARD NO. 1-675-884-11

GS-APX-397_IF-735_001_011

8-52

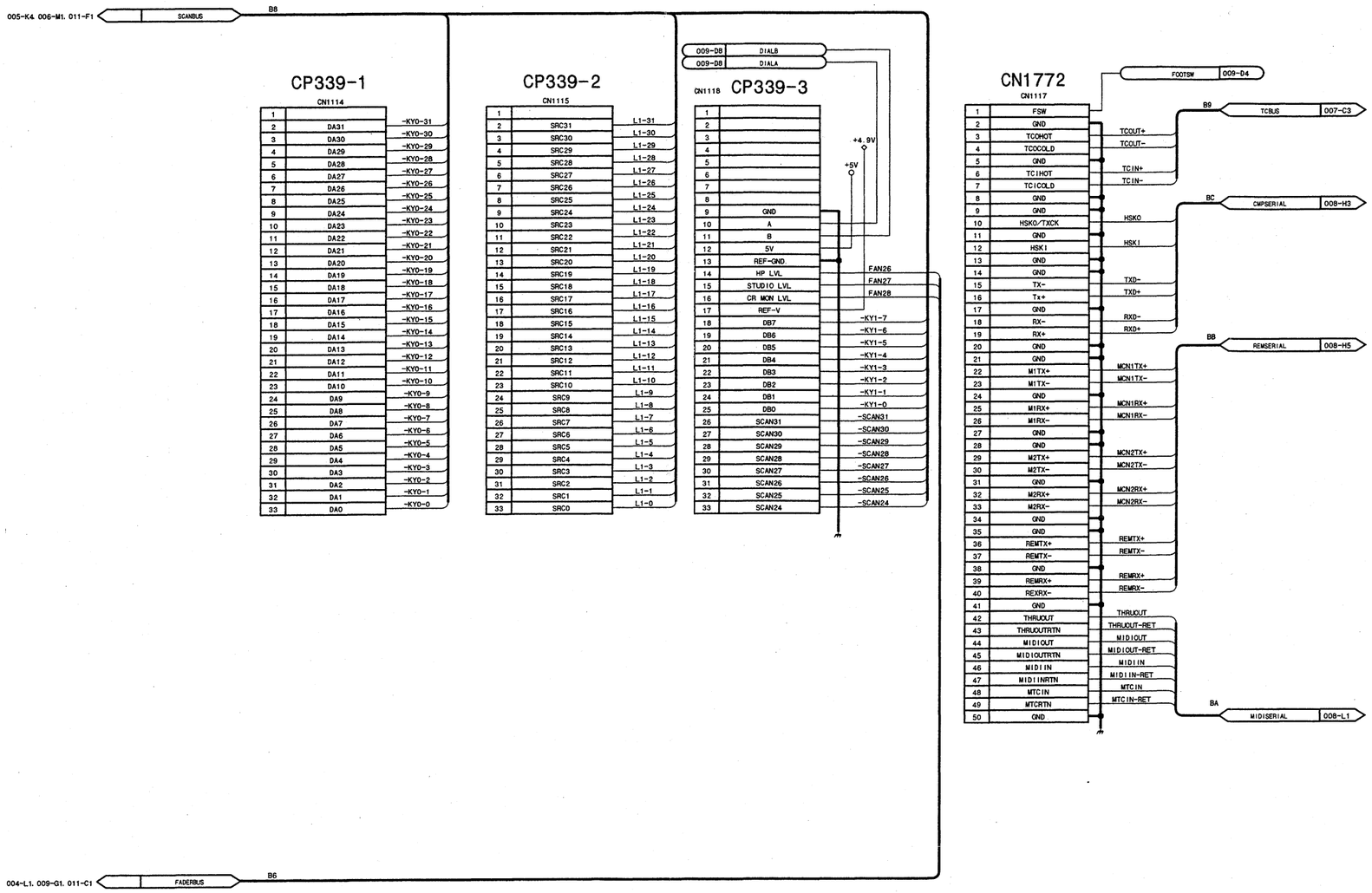

IF-735 (12/12)

BOARD NO. 1-675-884-11

GS-APX-397_IF-735_001_012

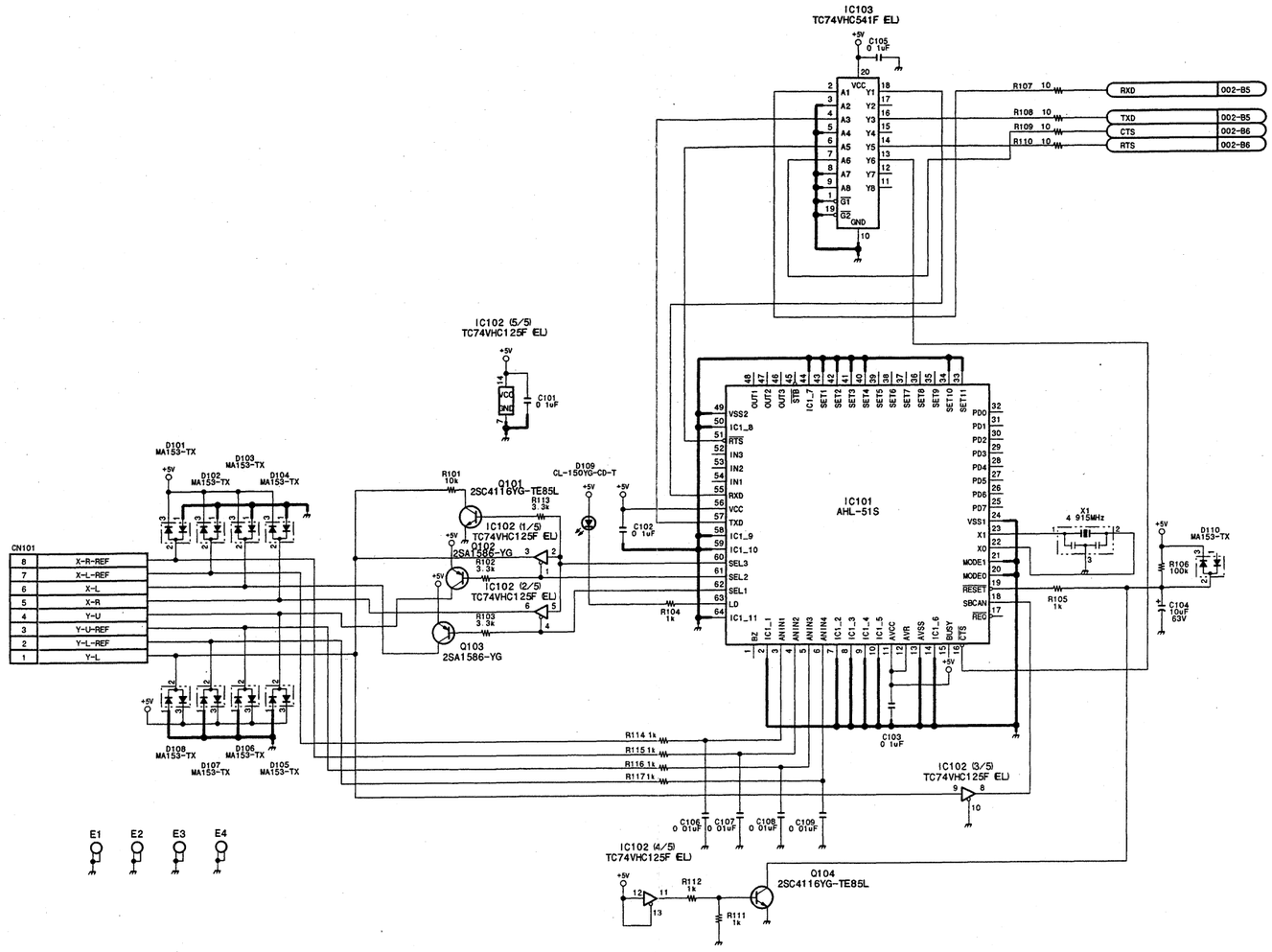

LC-38 (1/2)
BOARD NO. 1-675-874-12
GS-APX-397_LC-38_001_001

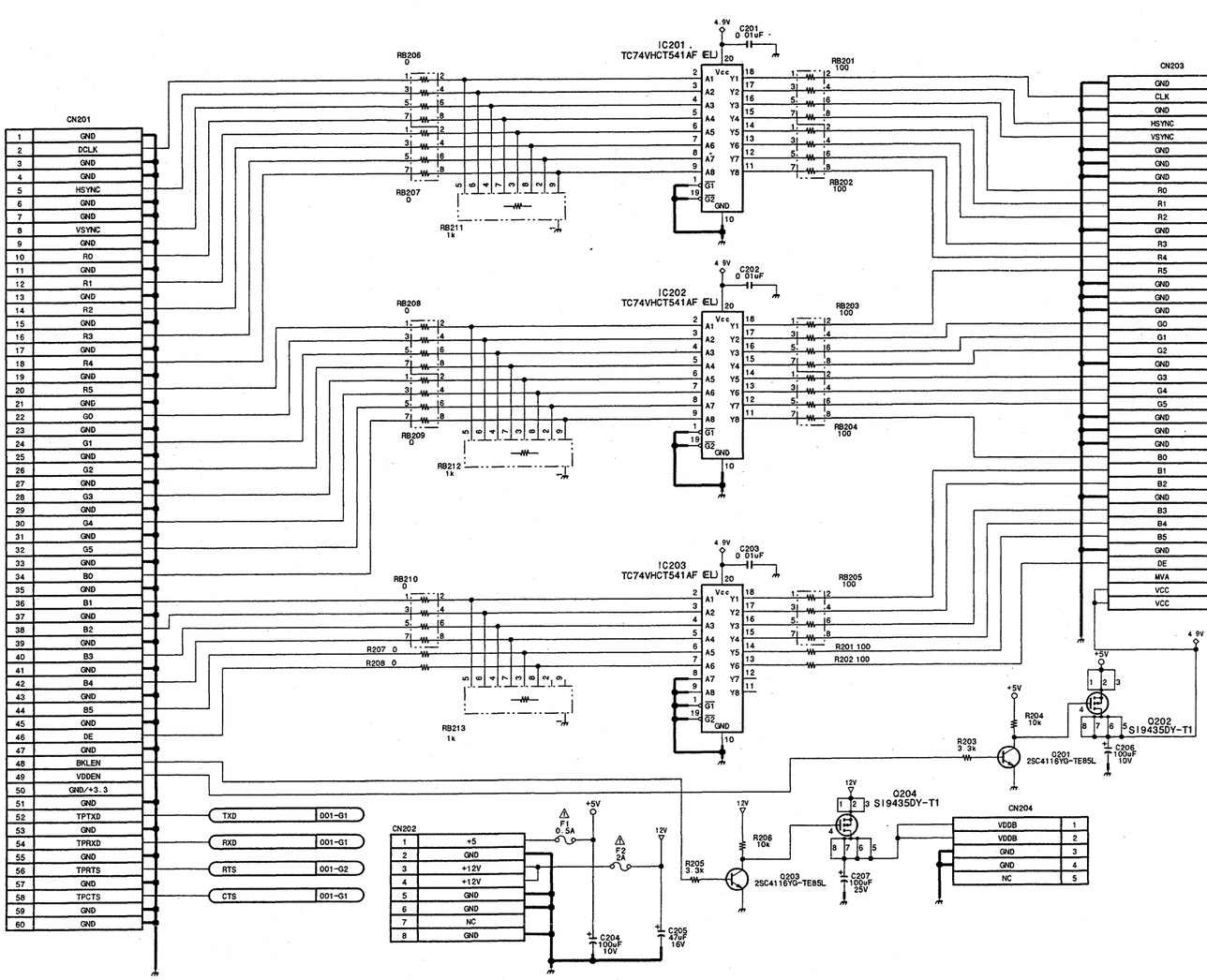

LC-38 (2/2)

BOARD NO. 1-675-874-12

GS-APX-397_LC-38_001_001

CN-1941

BOARD NO. 1-675-864-11,-12

GS-APX-397_CN-1941_001

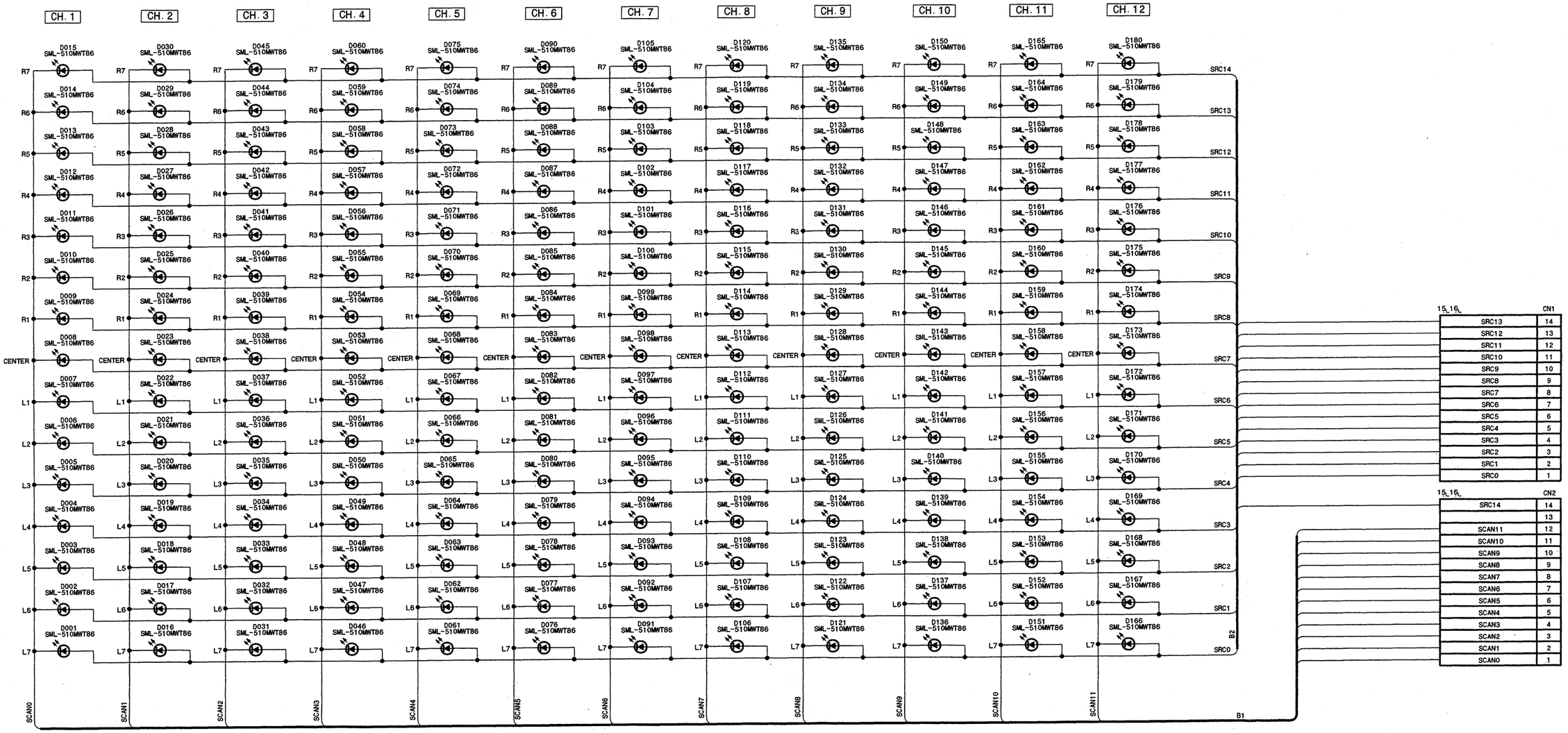

LED-332

BOARD NO. 1-675-889-11,-12

GS-APX-397_LED-332_001_001

MB-836 (1/4)

TERMINATION

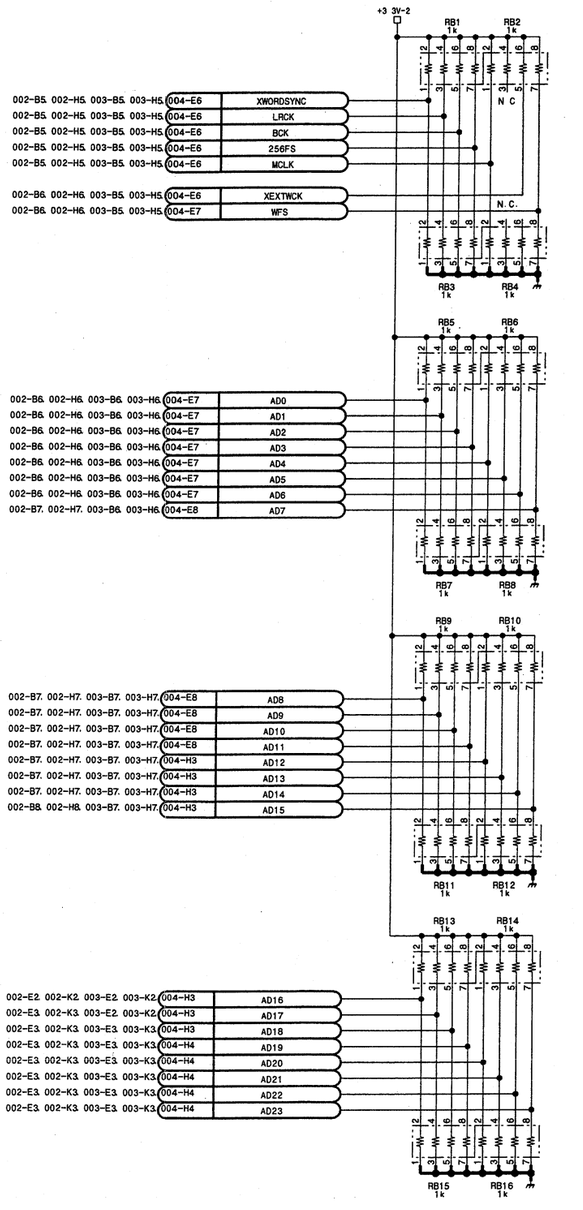

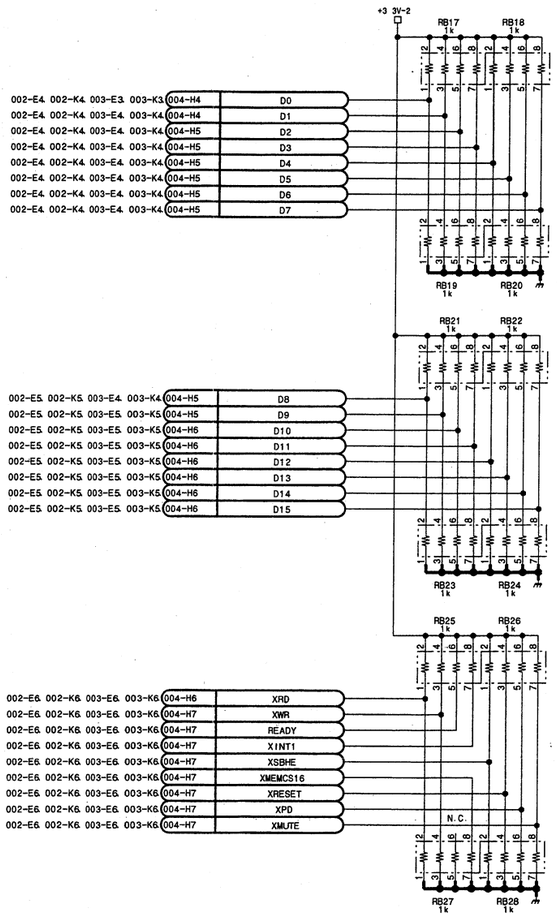

DC-102IF

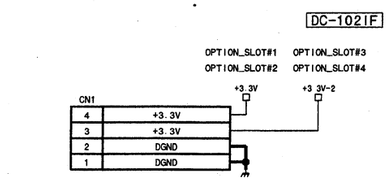

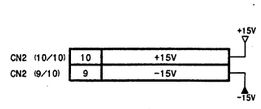

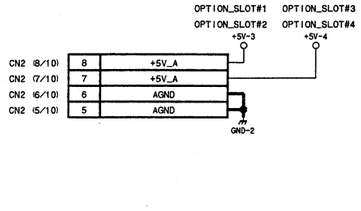

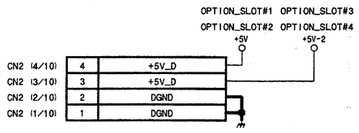

MB-836 (1/4)
BOARD NO. 1-675-882-11
GS-APX-397_MB-836_002_001

MB-836 (2/4)

OPTION_SLOT#1IF

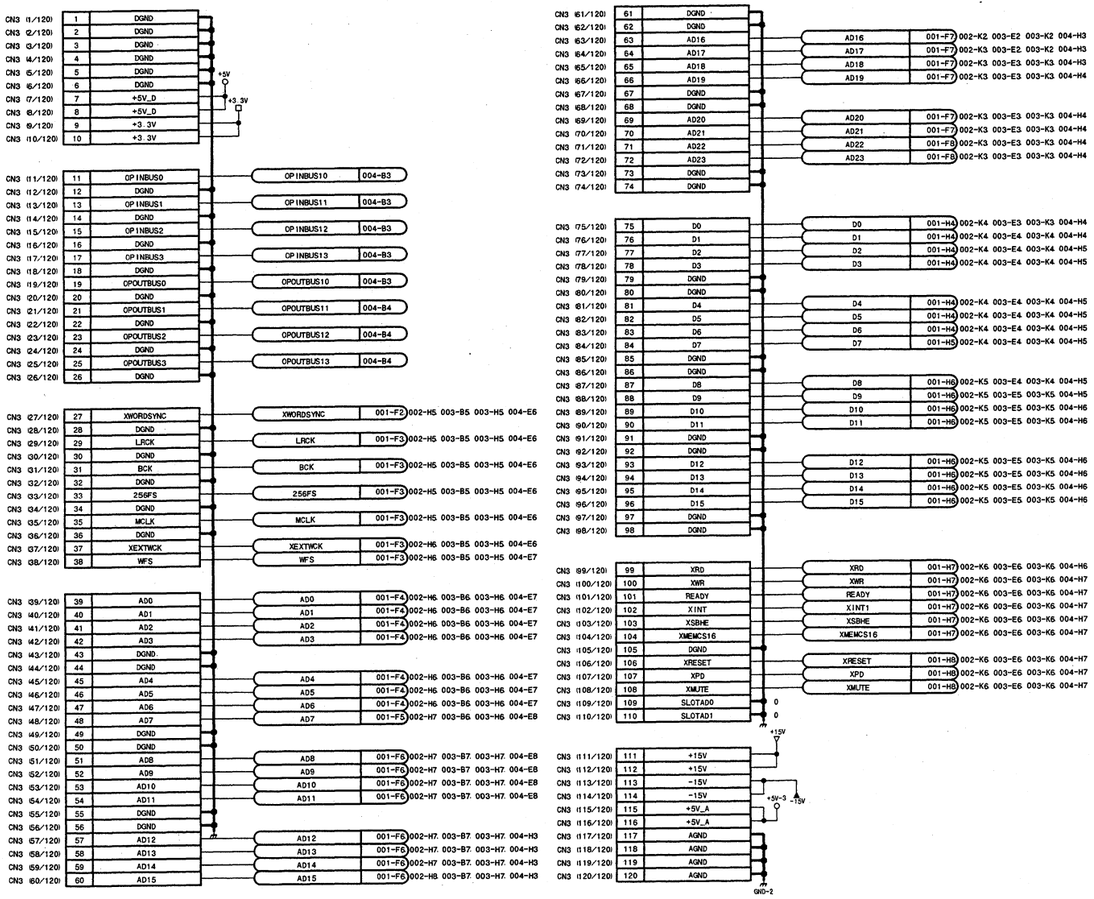

OPTION_SLOT#2IF

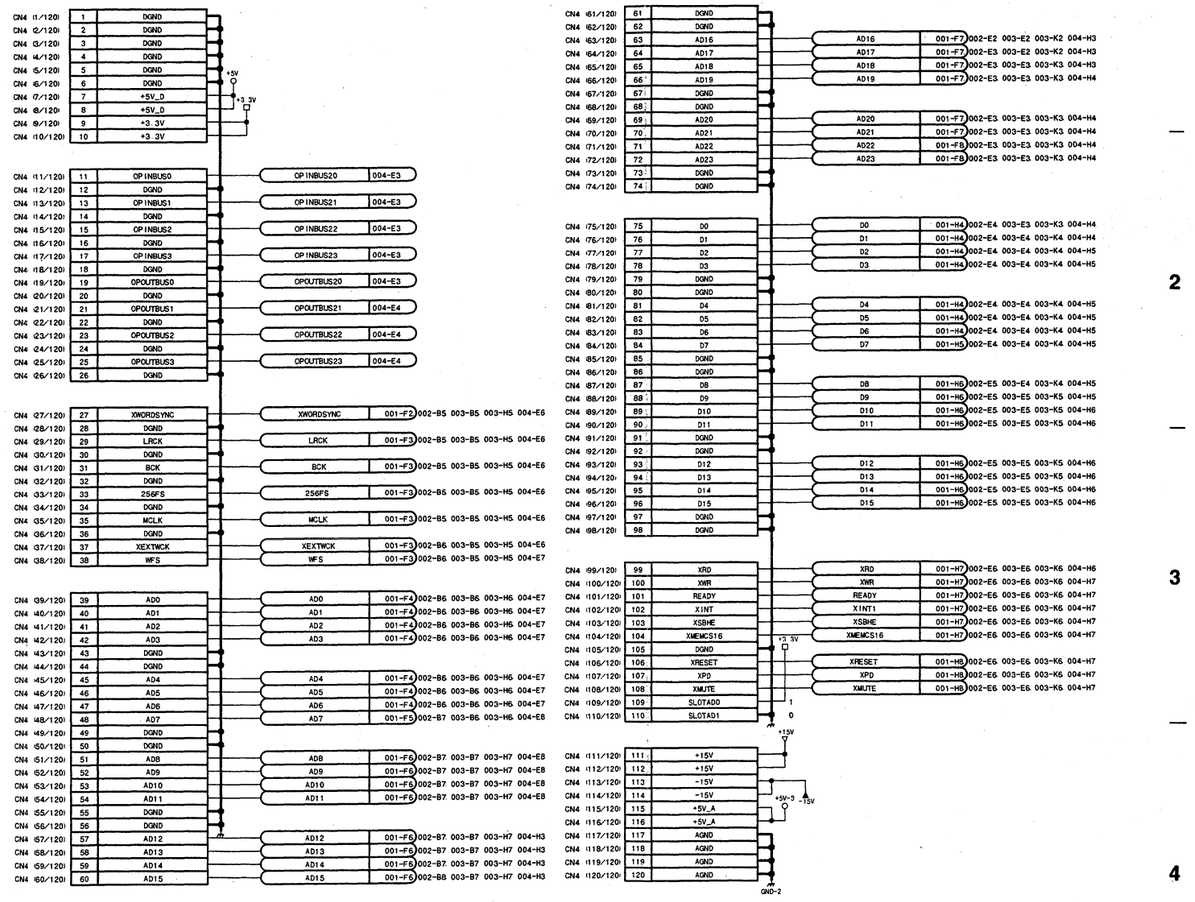

MB-836 (2/4)
BOARD NO. 1-675-882-11
GS-APX-397_MB-836_002_002

MB-836 (3/4)

OPTION_SLOT#31F

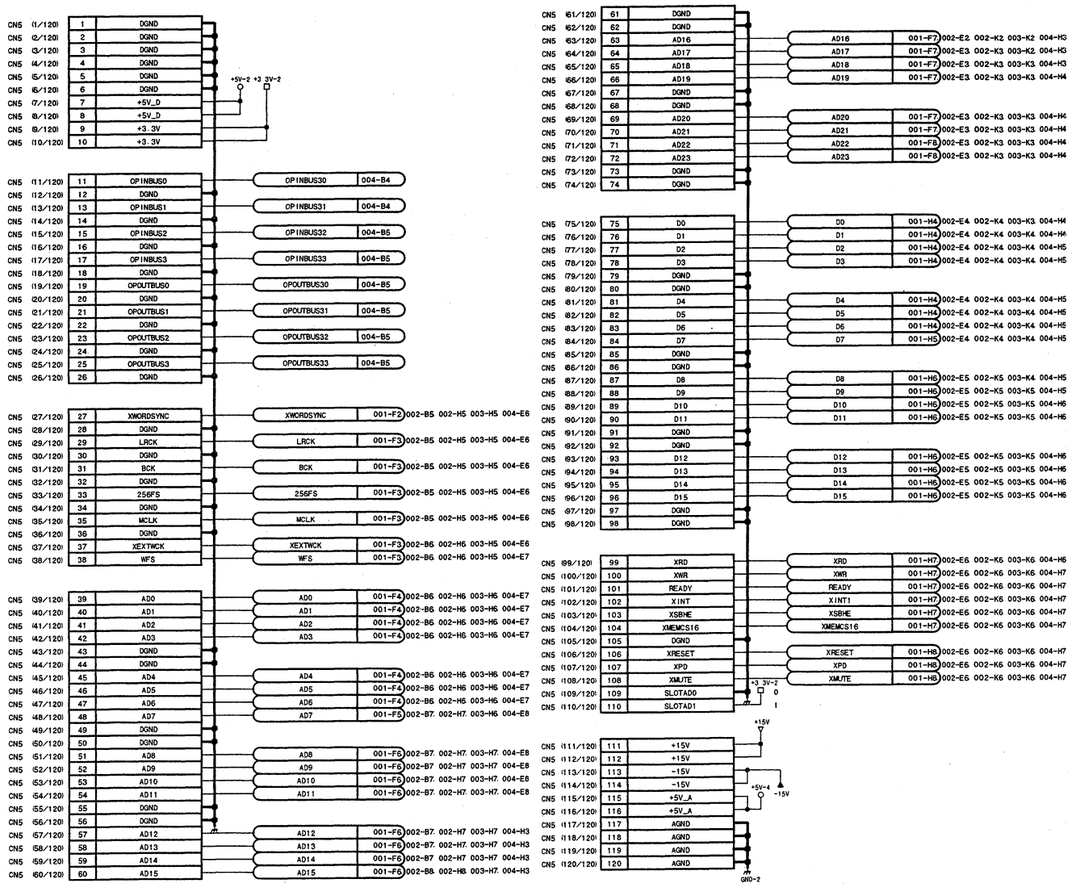

OPTION_SLOT#41F

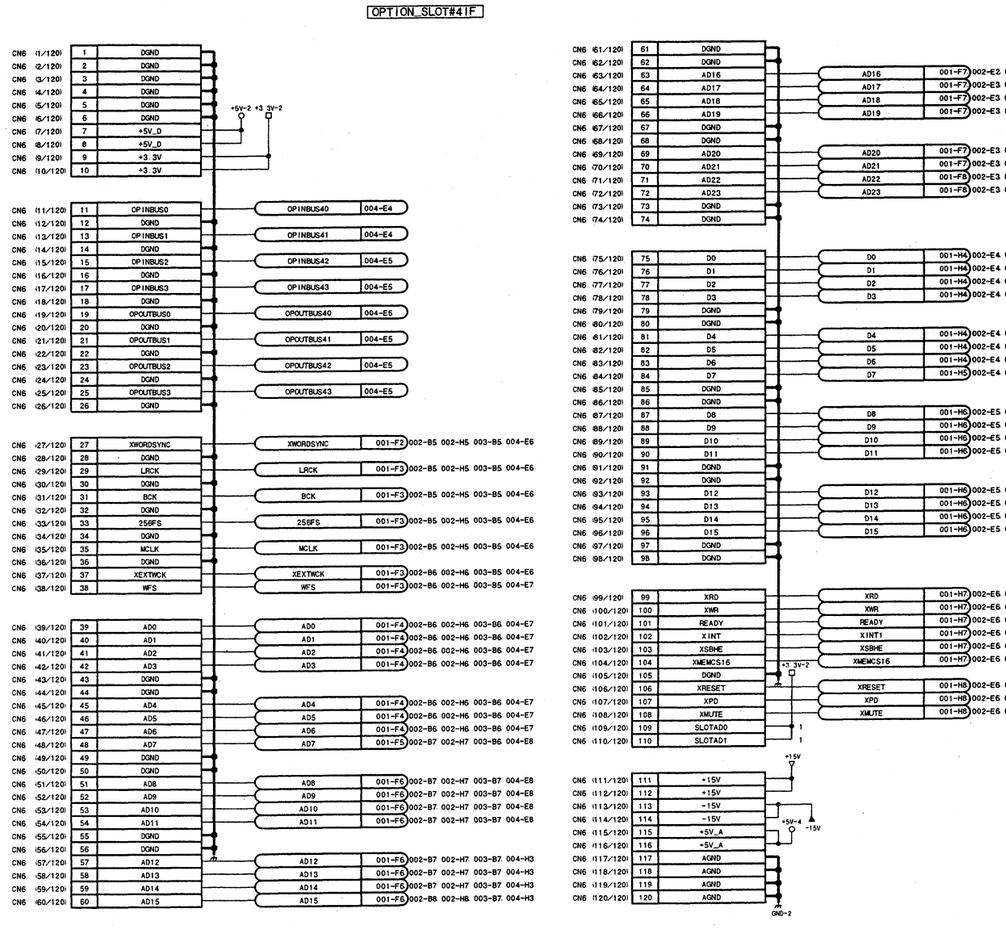

MB-836 (3/4)

BOARD NO. 1-675-882-11

GS-APX-397_MB-836_002_003

8-60 8-60

DMX-R100/V2

MB-836 (4/4)

MIX-391F

CN8 (1/60)	1	OPINBUS10	OPINBUS10	002-B3
CN8 (2/60)	2	DGND		
CN8 (3/60)	3	OPINBUS11	OPINBUS11	002-B3
CN8 (4/60)	4	DGND		
CN8 (5/60)	5	OPINBUS12	OPINBUS12	002-B4
CN8 (6/60)	6	DGND		
CN8 (7/60)	7	OPINBUS13	OPINBUS13	002-B4
CN8 (8/60)	8	DGND		
CN8 (9/60)	9	OPOUTBUS10	OPOUTBUS10	002-B4
CN8 (10/60)	10	DGND		
CN8 (11/60)	11	OPOUTBUS11	OPOUTBUS11	002-B4
CN8 (12/60)	12	DGND		
CN8 (13/60)	13	OPOUTBUS12	OPOUTBUS12	002-B4
CN8 (14/60)	14	DGND		
CN8 (15/60)	15	OPOUTBUS13	OPOUTBUS13	002-B4
CN8 (16/60)	16	DGND		
CN8 (17/60)	17	OPINBUS30	OPINBUS30	003-B3
CN8 (18/60)	18	DGND		
CN8 (19/60)	19	OPINBUS31	OPINBUS31	003-B3
CN8 (20/60)	20	DGND		
CN8 (21/60)	21	OPINBUS32	OPINBUS32	003-B3
CN8 (22/60)	22	DGND		
CN8 (23/60)	23	OPINBUS33	OPINBUS33	003-B4
CN8 (24/60)	24	DGND		
CN8 (25/60)	25	OPOUTBUS30	OPOUTBUS30	003-B4
CN8 (26/60)	26	DGND		
CN8 (27/60)	27	OPOUTBUS31	OPOUTBUS31	003-B4
CN8 (28/60)	28	DGND		
CN8 (29/60)	29	OPOUTBUS32	OPOUTBUS32	003-B4
CN8 (30/60)	30	DGND		
CN8 (31/60)	31	OPOUTBUS33	OPOUTBUS33	003-B4
CN8 (32/60)	32	DGND		
CN8 (33/60)	33	DGND		
CN8 (34/60)	34	DGND		
CN8 (35/60)	35	DGND		
CN8 (36/60)	36	DGND		
CN8 (37/60)	37	DGND		
CN8 (38/60)	38	DGND		
CN8 (39/60)	39	CASCADEIN0	CASCADEIN0	004-K3
CN8 (40/60)	40	DGND		
CN8 (41/60)	41	CASCADEIN1	CASCADEIN1	004-K3
CN8 (42/60)	42	DGND		
CN8 (43/60)	43	CASCADEIN2	CASCADEIN2	004-K3
CN8 (44/60)	44	DGND		
CN8 (45/60)	45	CASCADEOUT0	CASCADEOUT0	004-K4
CN8 (46/60)	46	DGND		
CN8 (47/60)	47	CASCADEOUT1	CASCADEOUT1	004-K4
CN8 (48/60)	48	DGND		
CN8 (49/60)	49	CASCADEOUT2	CASCADEOUT2	004-K4
CN8 (50/60)	50	DGND		
CN8 (51/60)	51	AUX1	AUX1	004-K4
CN8 (52/60)	52	DGND		
CN8 (53/60)	53	AUX2	AUX2	004-K4
CN8 (54/60)	54	DGND		
CN8 (55/60)	55	WSA	WSA	004-K5
CN8 (56/60)	56	DGND		
CN8 (57/60)	57	30MHZ	30MHZ	004-K5
CN8 (58/60)	58	DGND		
CN8 (59/60)	59	XILINKCARD	XILINKCARD	004-K5
CN8 (60/60)	60	DGND		

CN9 (1/120)	1	OPINBUS20	OPINBUS20	002-H3
CN9 (2/120)	2	DGND		
CN9 (3/120)	3	OPINBUS21	OPINBUS21	002-H3
CN9 (4/120)	4	DGND		
CN9 (5/120)	5	OPINBUS22	OPINBUS22	002-H4
CN9 (6/120)	6	DGND		
CN9 (7/120)	7	OPINBUS23	OPINBUS23	002-H4
CN9 (8/120)	8	DGND		
CN9 (9/120)	9	OPOUTBUS20	OPOUTBUS20	002-H4
CN9 (10/120)	10	DGND		
CN9 (11/120)	11	OPOUTBUS21	OPOUTBUS21	002-H4
CN9 (12/120)	12	DGND		
CN9 (13/120)	13	OPOUTBUS22	OPOUTBUS22	002-H4
CN9 (14/120)	14	DGND		
CN9 (15/120)	15	OPOUTBUS23	OPOUTBUS23	002-H4
CN9 (16/120)	16	DGND		
CN9 (17/120)	17	OPINBUS40	OPINBUS40	003-H3
CN9 (18/120)	18	DGND		
CN9 (19/120)	19	OPINBUS41	OPINBUS41	003-H3
CN9 (20/120)	20	DGND		
CN9 (21/120)	21	OPINBUS42	OPINBUS42	003-H3
CN9 (22/120)	22	DGND		
CN9 (23/120)	23	OPINBUS43	OPINBUS43	003-H4
CN9 (24/120)	24	DGND		
CN9 (25/120)	25	OPOUTBUS40	OPOUTBUS40	003-H4
CN9 (26/120)	26	DGND		
CN9 (27/120)	27	OPOUTBUS41	OPOUTBUS41	003-H4
CN9 (28/120)	28	DGND		
CN9 (29/120)	29	OPOUTBUS42	OPOUTBUS42	003-H4
CN9 (30/120)	30	DGND		
CN9 (31/120)	31	OPOUTBUS43	OPOUTBUS43	003-H4
CN9 (32/120)	32	DGND		
CN9 (33/120)	33	XWORDSYNC	XWORDSYNC	001-F2 002-B5, 002-H5, 003-B5, 003-H5
CN9 (34/120)	34	DGND		
CN9 (35/120)	35	LRCK	LRCK	001-F3 002-B5, 002-H5, 003-B5, 003-H5
CN9 (36/120)	36	DGND		
CN9 (37/120)	37	BCK	BCK	001-F3 002-B5, 002-H5, 003-B5, 003-H5
CN9 (38/120)	38	DGND		
CN9 (39/120)	39	256FS	256FS	001-F3 002-B5, 002-H5, 003-B5, 003-H5
CN9 (40/120)	40	DGND		
CN9 (41/120)	41	MCLK	MCLK	001-F3 002-B5, 002-H5, 003-B5, 003-H5
CN9 (42/120)	42	DGND		
CN9 (43/120)	43	XEXTWCK	XEXTWCK	001-F3 002-B6, 002-H6, 003-B5, 003-H5
CN9 (44/120)	44	WFS	WFS	001-F3 002-B6, 002-H6, 003-B5, 003-H5
CN9 (45/120)	45	AD0	AD0	001-F4 002-B6, 002-H6, 003-B6, 003-H6
CN9 (46/120)	46	AD1	AD1	001-F4 002-B6, 002-H6, 003-B6, 003-H6
CN9 (47/120)	47	AD2	AD2	001-F4 002-B6, 002-H6, 003-B6, 003-H6
CN9 (48/120)	48	AD3	AD3	001-F4 002-B6, 002-H6, 003-B6, 003-H6
CN9 (49/120)	49	DGND		
CN9 (50/120)	50	DGND		
CN9 (51/120)	51	AD4	AD4	001-F4 002-B6, 002-H6, 003-B6, 003-H6
CN9 (52/120)	52	AD5	AD5	001-F4 002-B6, 002-H6, 003-B6, 003-H6
CN9 (53/120)	53	AD6	AD6	001-F4 002-B6, 002-H6, 003-B6, 003-H6
CN9 (54/120)	54	AD7	AD7	001-F5 002-B7, 002-H7, 003-B6, 003-H6
CN9 (55/120)	55	DGND		
CN9 (56/120)	56	DGND		
CN9 (57/120)	57	AD8	AD8	001-F6 002-B7, 002-H7, 003-B7, 003-H7
CN9 (58/120)	58	AD9	AD9	001-F6 002-B7, 002-H7, 003-B7, 003-H7
CN9 (59/120)	59	AD10	AD10	001-F6 002-B7, 002-H7, 003-B7, 003-H7
CN9 (60/120)	60	AD11	AD11	001-F6 002-B7, 002-H7, 003-B7, 003-H7
CN9 (61/120)	61	DGND		
CN9 (62/120)	62	DGND		

iLINKIF

CN9 (63/120)	63	AD12	AD12	001-F6 002-B7, 002-H7, 003-B7, 003-H7
CN9 (64/120)	64	AD13	AD13	001-F6 002-B7, 002-H7, 003-B7, 003-H7
CN9 (65/120)	65	AD14	AD14	001-F6 002-B7, 002-H7, 003-B7, 003-H7
CN9 (66/120)	66	AD15	AD15	001-F6 002-B8, 002-H8, 003-B7, 003-H7
CN9 (67/120)	67	DGND		
CN9 (68/120)	68	DGND		
CN9 (69/120)	69	AD16	AD16	001-F7 002-E2, 002-K2, 003-E2, 003-K2
CN9 (70/120)	70	AD17	AD17	001-F7 002-E3, 002-K3, 003-E2, 003-K2
CN9 (71/120)	71	AD18	AD18	001-F7 002-E3, 002-K3, 003-E3, 003-K3
CN9 (72/120)	72	AD19	AD19	001-F7 002-E3, 002-K3, 003-E3, 003-K3
CN9 (73/120)	73	DGND		
CN9 (74/120)	74	DGND		
CN9 (75/120)	75	AD20	AD20	001-F7 002-E3, 002-K3, 003-E3, 003-K3
CN9 (76/120)	76	AD21	AD21	001-F7 002-E3, 002-K3, 003-E3, 003-K3
CN9 (77/120)	77	AD22	AD22	001-F8 002-E3, 002-K3, 003-E3, 003-K3
CN9 (78/120)	78	AD23	AD23	001-F8 002-E3, 002-K3, 003-E3, 003-K3
CN9 (79/120)	79	DGND		
CN9 (80/120)	80	DGND		
CN9 (81/120)	81	D0	D0	001-H4 002-E4, 002-K4, 003-E3, 003-K3
CN9 (82/120)	82	D1	D1	001-H4 002-E4, 002-K4, 003-E4, 003-K4
CN9 (83/120)	83	D2	D2	001-H4 002-E4, 002-K4, 003-E4, 003-K4
CN9 (84/120)	84	D3	D3	001-H4 002-E4, 002-K4, 003-E4, 003-K4
CN9 (85/120)	85	DGND		
CN9 (86/120)	86	DGND		
CN9 (87/120)	87	D4	D4	001-H4 002-E4, 002-K4, 003-E4, 003-K4
CN9 (88/120)	88	D5	D5	001-H4 002-E4, 002-K4, 003-E4, 003-K4
CN9 (89/120)	89	D6	D6	001-H4 002-E4, 002-K4, 003-E4, 003-K4
CN9 (90/120)	90	D7	D7	001-H5 002-E4, 002-K4, 003-E4, 003-K4
CN9 (91/120)	91	DGND		
CN9 (92/120)	92	DGND		
CN9 (93/120)	93	D8	D8	001-H6 002-E5, 002-K5, 003-E4, 003-K4
CN9 (94/120)	94	D9	D9	001-H6 002-E5, 002-K5, 003-E5, 003-K5
CN9 (95/120)	95	D10	D10	001-H6 002-E5, 002-K5, 003-E5, 003-K5
CN9 (96/120)	96	D11	D11	001-H6 002-E5, 002-K5, 003-E5, 003-K5
CN9 (97/120)	97	DGND		
CN9 (98/120)	98	DGND		
CN9 (99/120)	99	D12	D12	001-H6 002-E5, 002-K5, 003-E5, 003-K5
CN9 (100/120)	100	D13	D13	001-H6 002-E5, 002-K5, 003-E5, 003-K5
CN9 (101/120)	101	D14	D14	001-H6 002-E5, 002-K5, 003-E5, 003-K5
CN9 (102/120)	102	D15	D15	001-H6 002-E5, 002-K5, 003-E5, 003-K5
CN9 (103/120)	103	DGND		
CN9 (104/120)	104	DGND		
CN9 (105/120)	105	XRD	XRD	001-H7 002-E6, 002-K6, 003-E6, 003-K6
CN9 (106/120)	106	XWR	XWR	001-H7 002-E6, 002-K6, 003-E6, 003-K6
CN9 (107/120)	107	READY	READY	001-H7 002-E6, 002-K6, 003-E6, 003-K6
CN9 (108/120)	108	XINT1	XINT1	001-H7 002-E6, 002-K6, 003-E6, 003-K6
CN9 (109/120)	109	XSBHE	XSBHE	001-H7 002-E6, 002-K6, 003-E6, 003-K6
CN9 (110/120)	110	XMEMCS16	XMEMCS16	001-H7 002-E6, 002-K6, 003-E6, 003-K6
CN9 (111/120)	111	DGND		
CN9 (112/120)	112	XRESET	XRESET	001-H8 002-E6, 002-K6, 003-E6, 003-K6
CN9 (113/120)	113	XPD	XPD	001-H8 002-E6, 002-K6, 003-E6, 003-K6
CN9 (114/120)	114	XMUTE	XMUTE	001-H8 002-E6, 002-K6, 003-E6, 003-K6
CN9 (115/120)	115	DGND		
CN9 (116/120)	116	DGND		
CN9 (117/120)	117	DGND		
CN9 (118/120)	118	DGND		
CN9 (119/120)	119	DGND		
CN9 (120/120)	120	DGND		

CN7 (1/30)	1	DGND		
CN7 (2/30)	2	DGND		
CN7 (3/30)	3	DGND		
CN7 (4/30)	4	DGND		
CN7 (5/30)	5	CASCADEIN0	CASCADEIN0	004-B6
CN7 (6/30)	6	DGND		
CN7 (7/30)	7	CASCADEIN1	CASCADEIN1	004-B6
CN7 (8/30)	8	DGND		
CN7 (9/30)	9	CASCADEIN2	CASCADEIN2	004-B6
CN7 (10/30)	10	DGND		
CN7 (11/30)	11	CASCADEOUT0	CASCADEOUT0	004-B7
CN7 (12/30)	12	DGND		
CN7 (13/30)	13	CASCADEOUT1	CASCADEOUT1	004-B7
CN7 (14/30)	14	DGND		
CN7 (15/30)	15	CASCADEOUT2	CASCADEOUT2	004-B7
CN7 (16/30)	16	DGND		
CN7 (17/30)	17	AUX1	AUX1	004-B7
CN7 (18/30)	18	AUX2	AUX2	004-B7
CN7 (19/30)	19	DGND		
CN7 (20/30)	20	DGND		
CN7 (21/30)	21	WSA	WSA	004-B7
CN7 (22/30)	22	DGND		
CN7 (23/30)	23	30MHZ	30MHZ	004-B8
CN7 (24/30)	24	DGND		
CN7 (25/30)	25	DGND		
CN7 (26/30)	26	XILINKCARD	XILINKCARD	004-B8
CN7 (27/30)	27	+5V_D	+5V-2	
CN7 (28/30)	28	+5V_D		
CN7 (29/30)	29	DGND		
CN7 (30/30)	30	DGND		

MB-836 (4/4)
BOARD NO. 1-675-882-12
GS-APX-397_MB-836_002_004

MIX-39 (1/21)

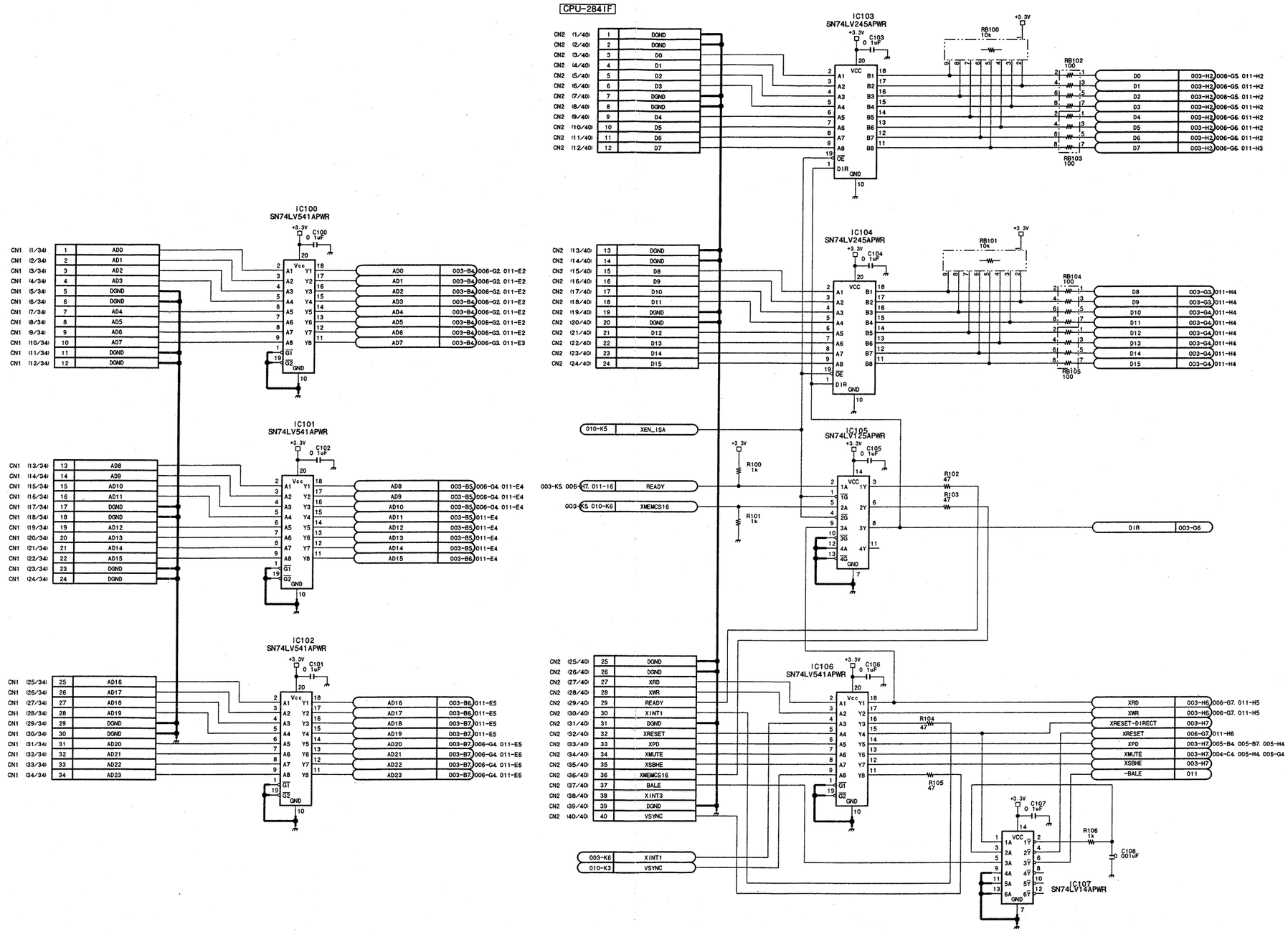

MIX-39 (1/21)

BOARD NO. 1-675-883-12,-13

GS-APX-397_MIX-39_003_001

8-62

DMX-R100/V2

MIX-39 (2/21)

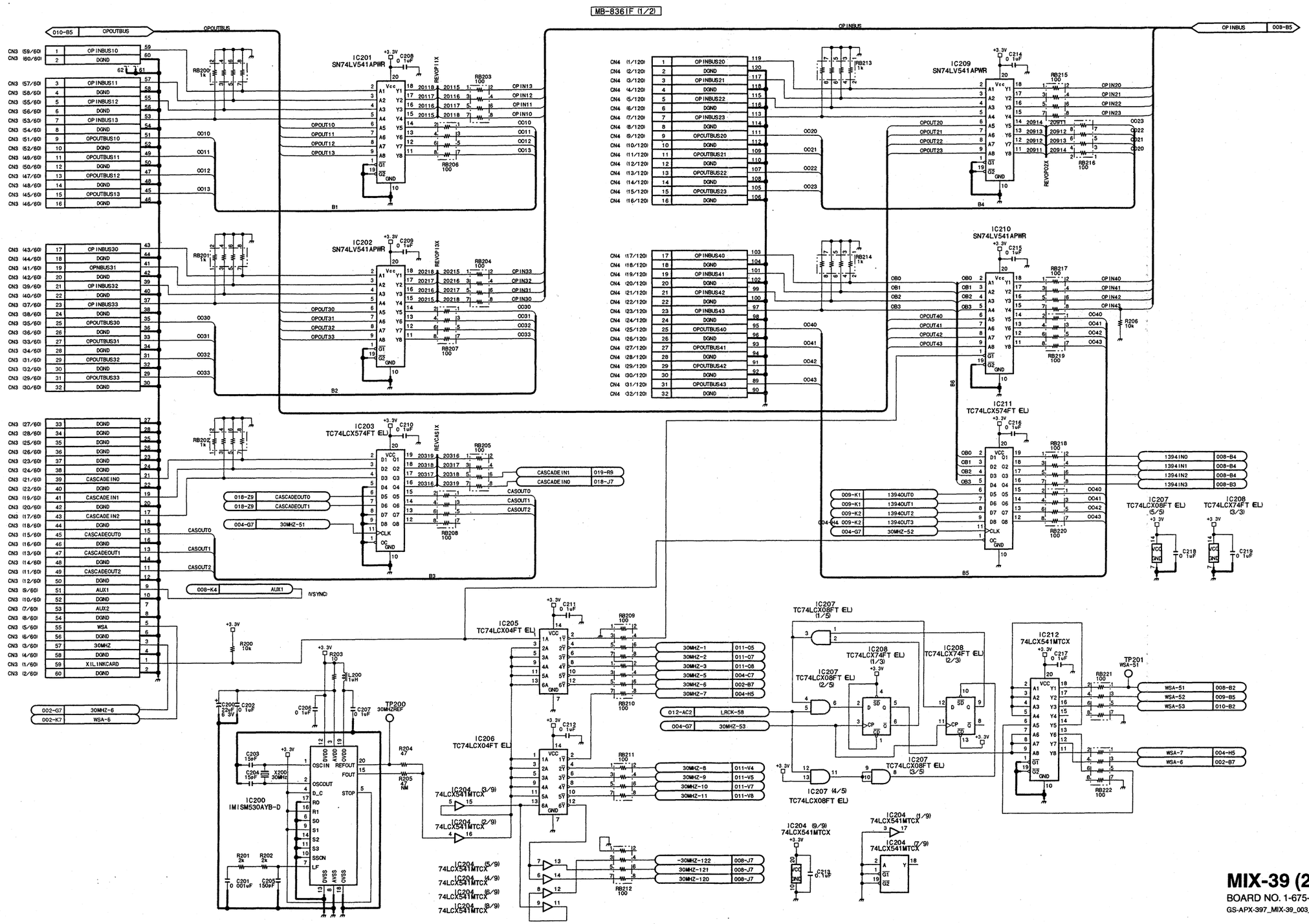

MIX-39 (2/21)

BOARD NO. 1-675-883-12,-13

GS-APX-397_MIX-39_003_002

DMX-R100/V2

8-63

8-63

MIX-39 (3/21)

MB-836(F (2/2)

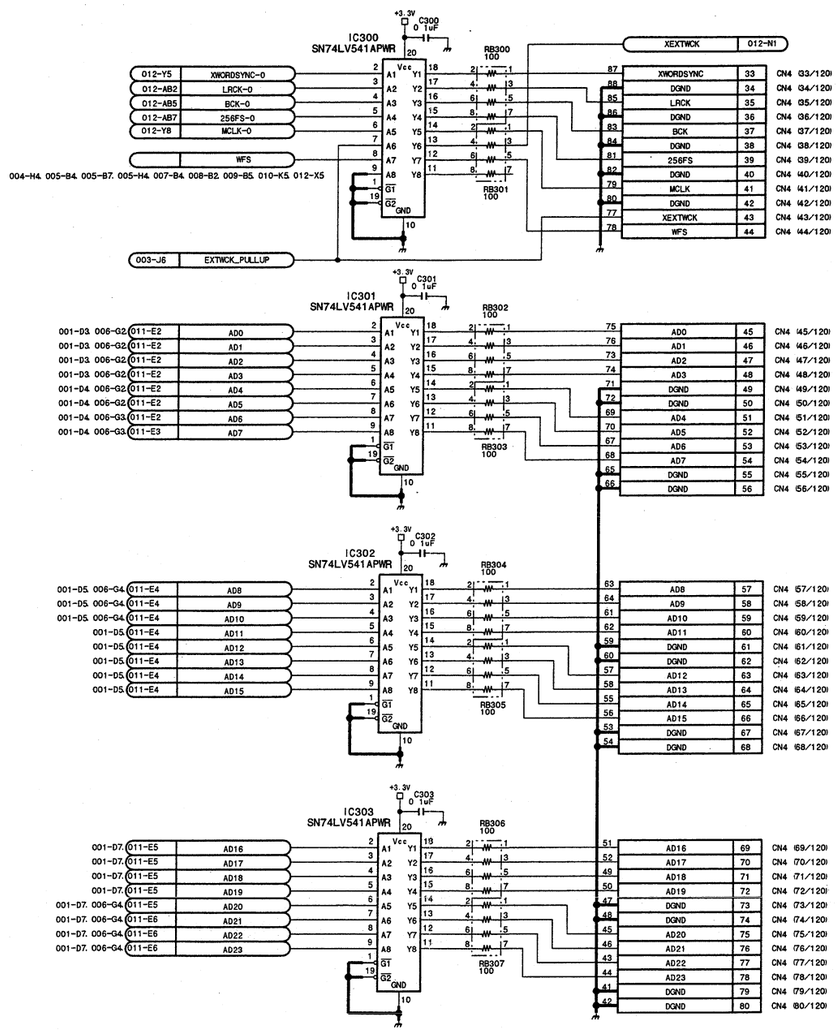

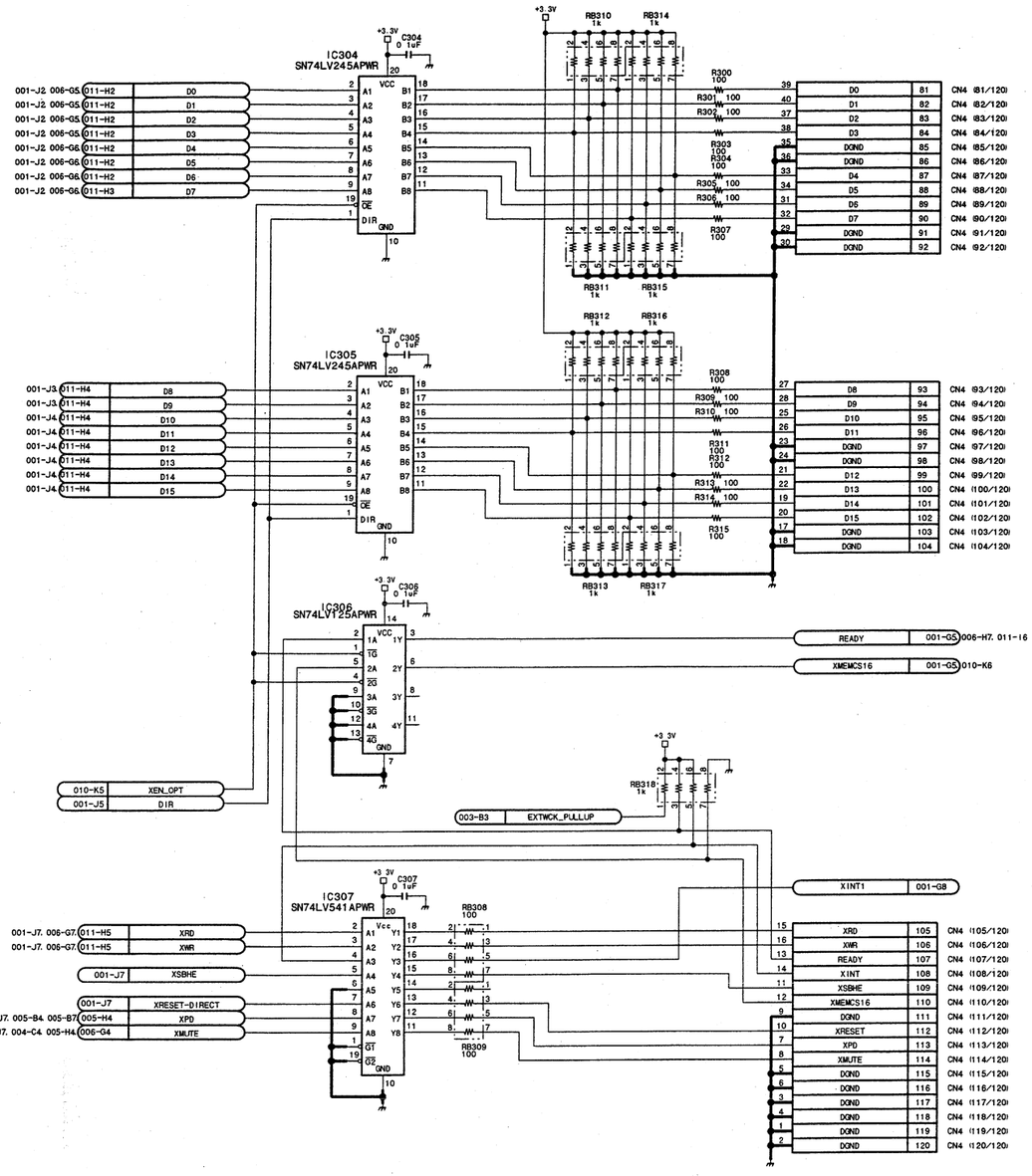

MIX-39 (3/21)

BOARD NO. 1-675-883-12,-13

GS-APX-397_MIX-39_003_003

8-64

DMX-R100/V2

MIX-39 (4/21)

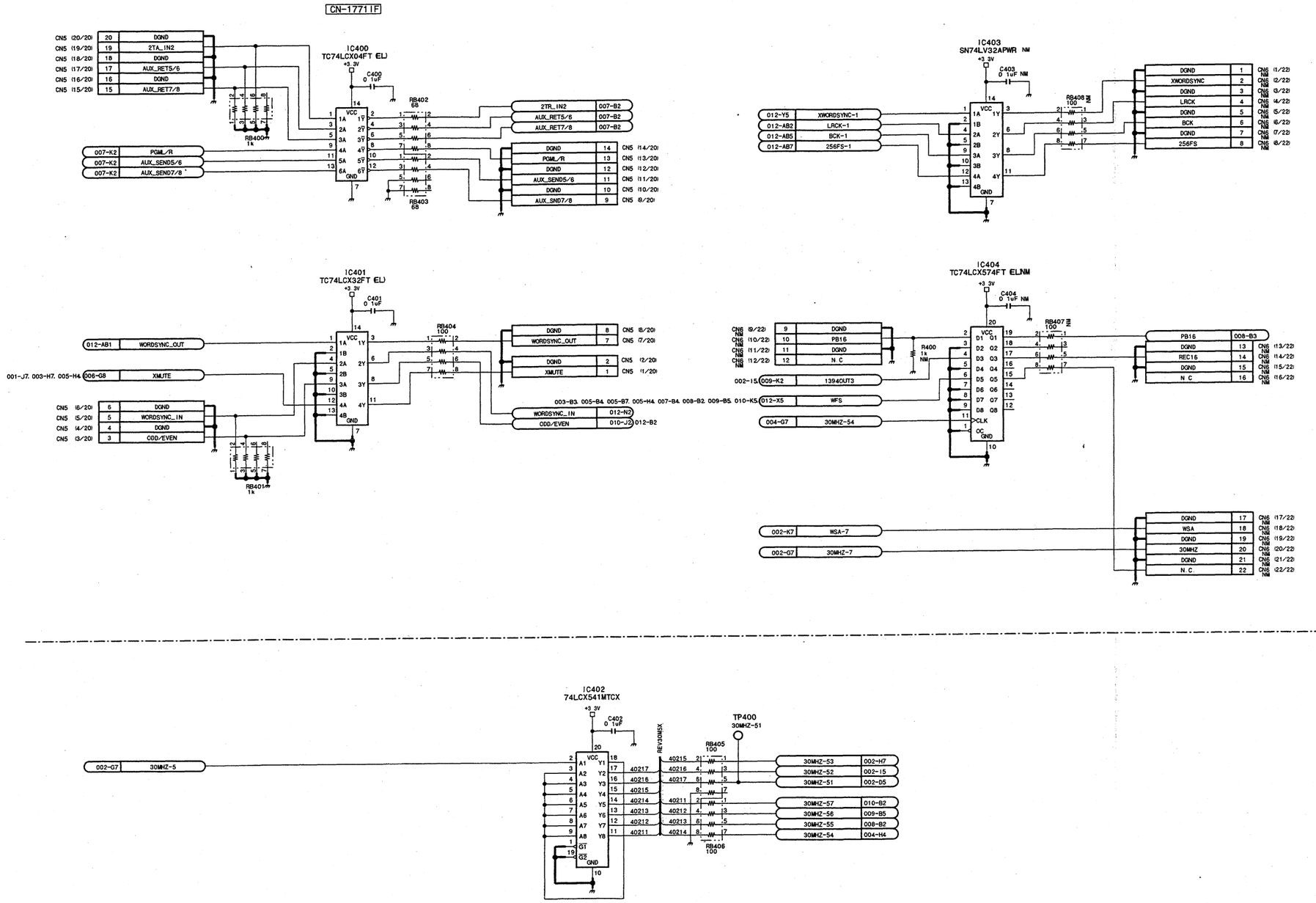

MIX-39 (4/21)

BOARD NO. 1-675-883-12,-13

GS-APX-397_MIX-39_003_004

MIX-39 (5/21)

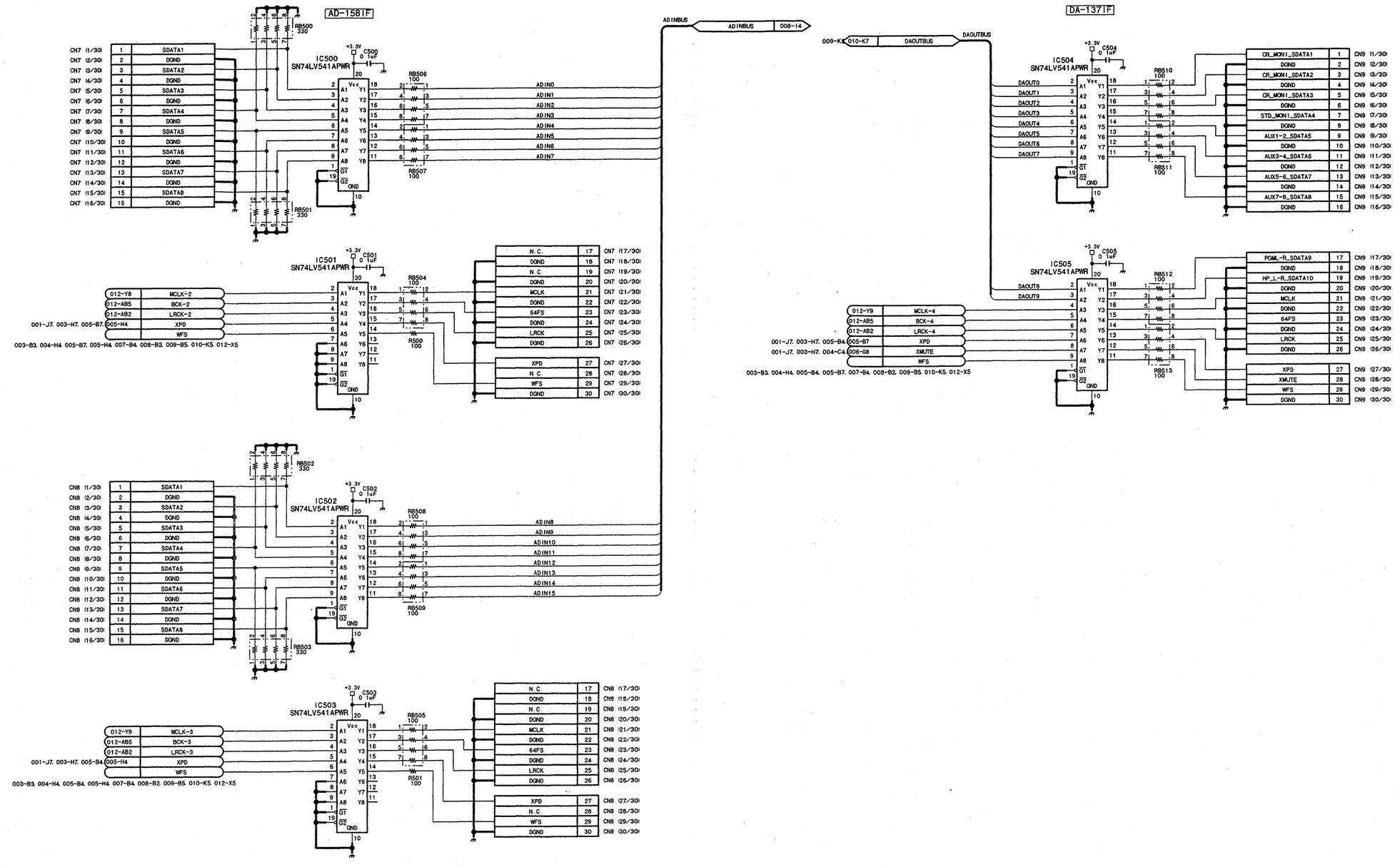

8-66

MIX-39 (5/21)

BOARD NO. 1-675-883-12,-13

GS-APX-397_MIX-39_003_005

DMX-R100/V2

MIX-39 (6/21)

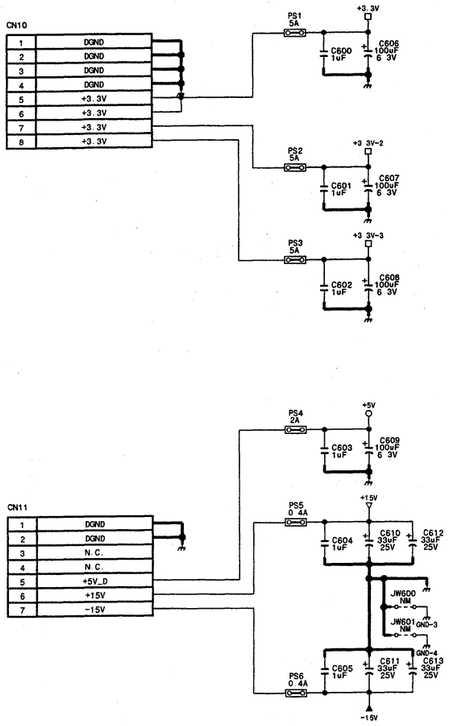

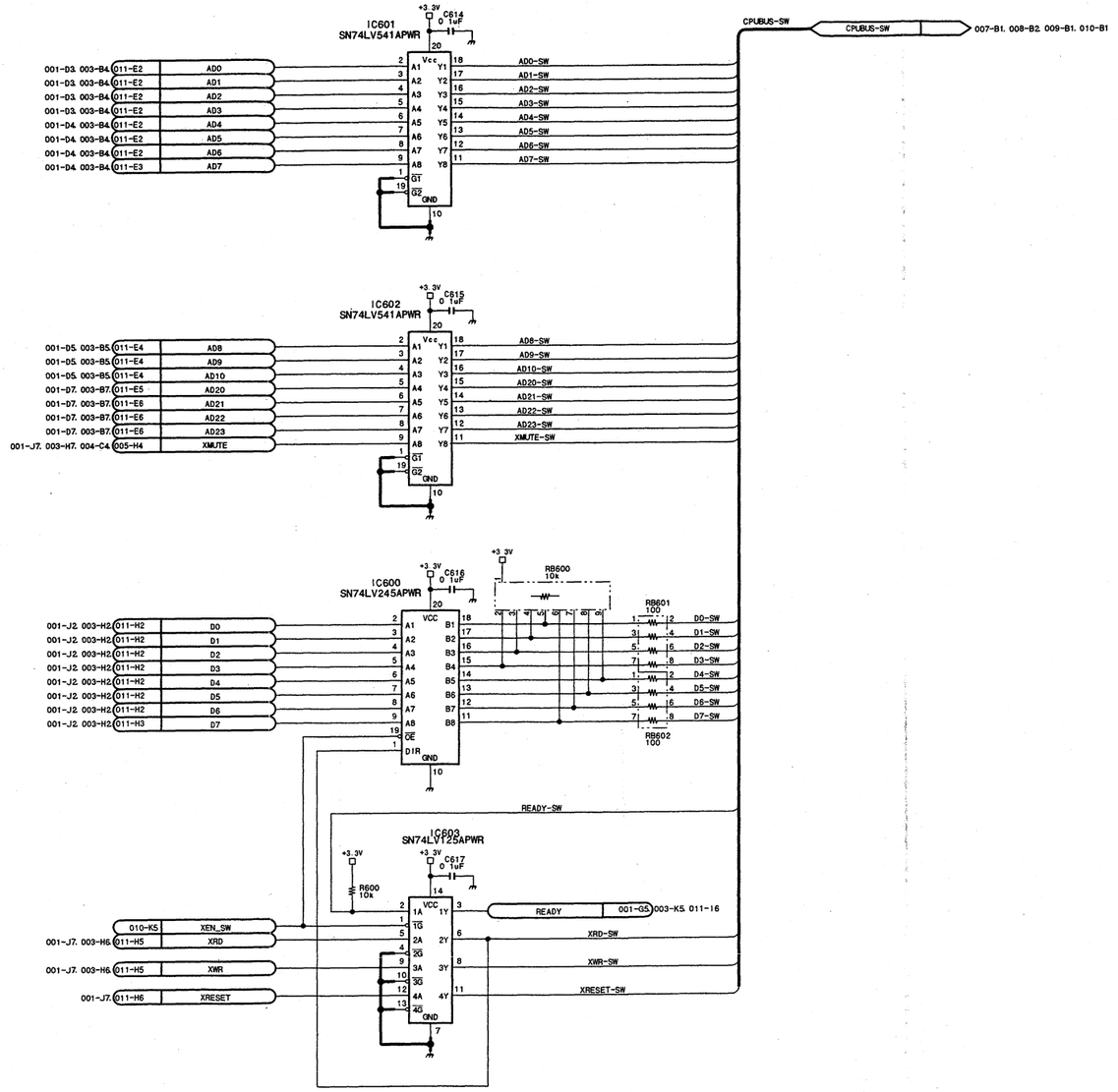

1
2
3
4
5

MIX-39 (6/21)

BOARD NO. 1-675-883-12,-13

GS-APX-397_MIX-39_003_006

A B C D E F G H

MIX-39 (7/21)

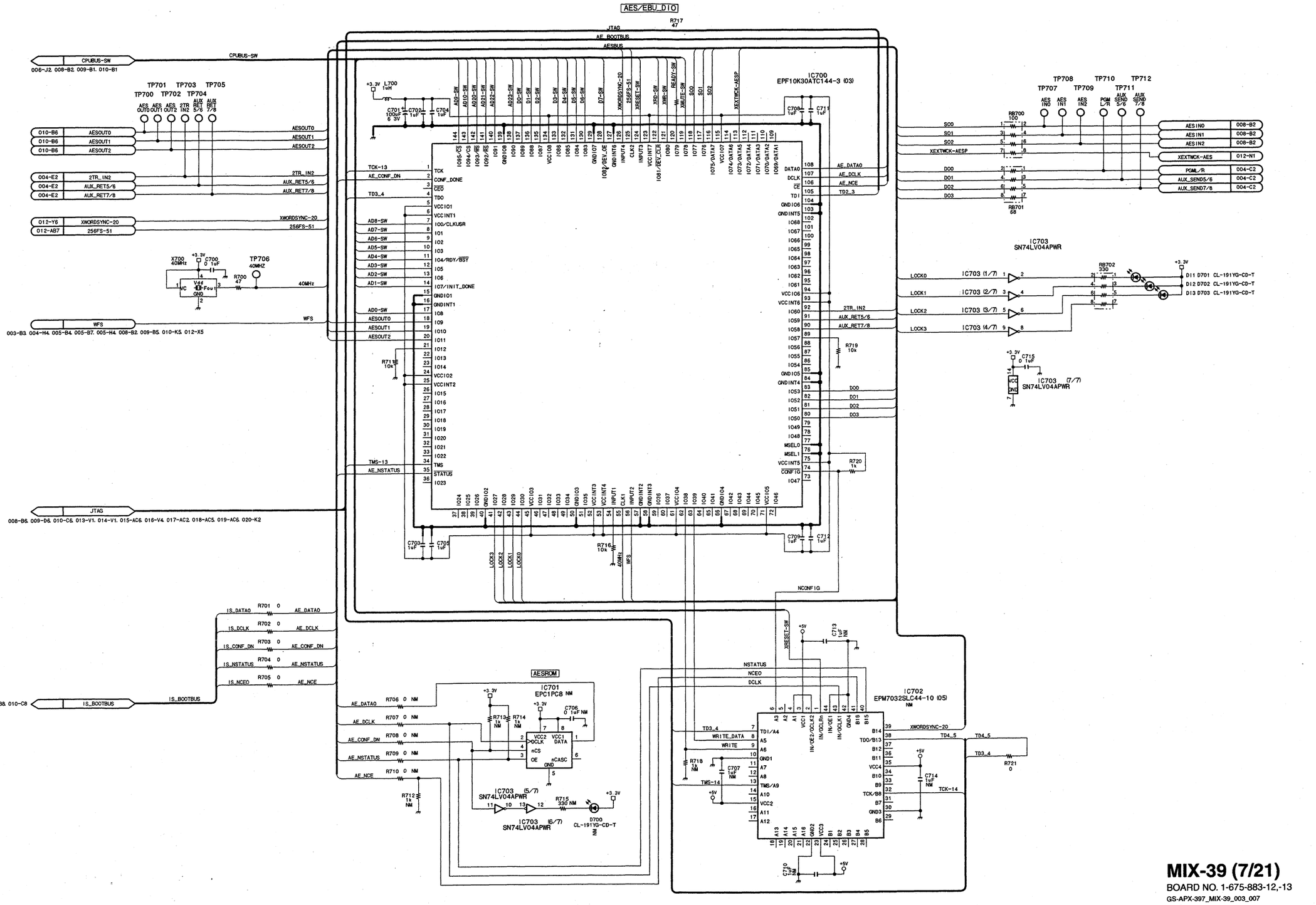

MIX-39 (7/21)
BOARD NO. 1-675-883-12,-13
GS-APX-397_MIX-39_003_007

MIX-39 (8/21)

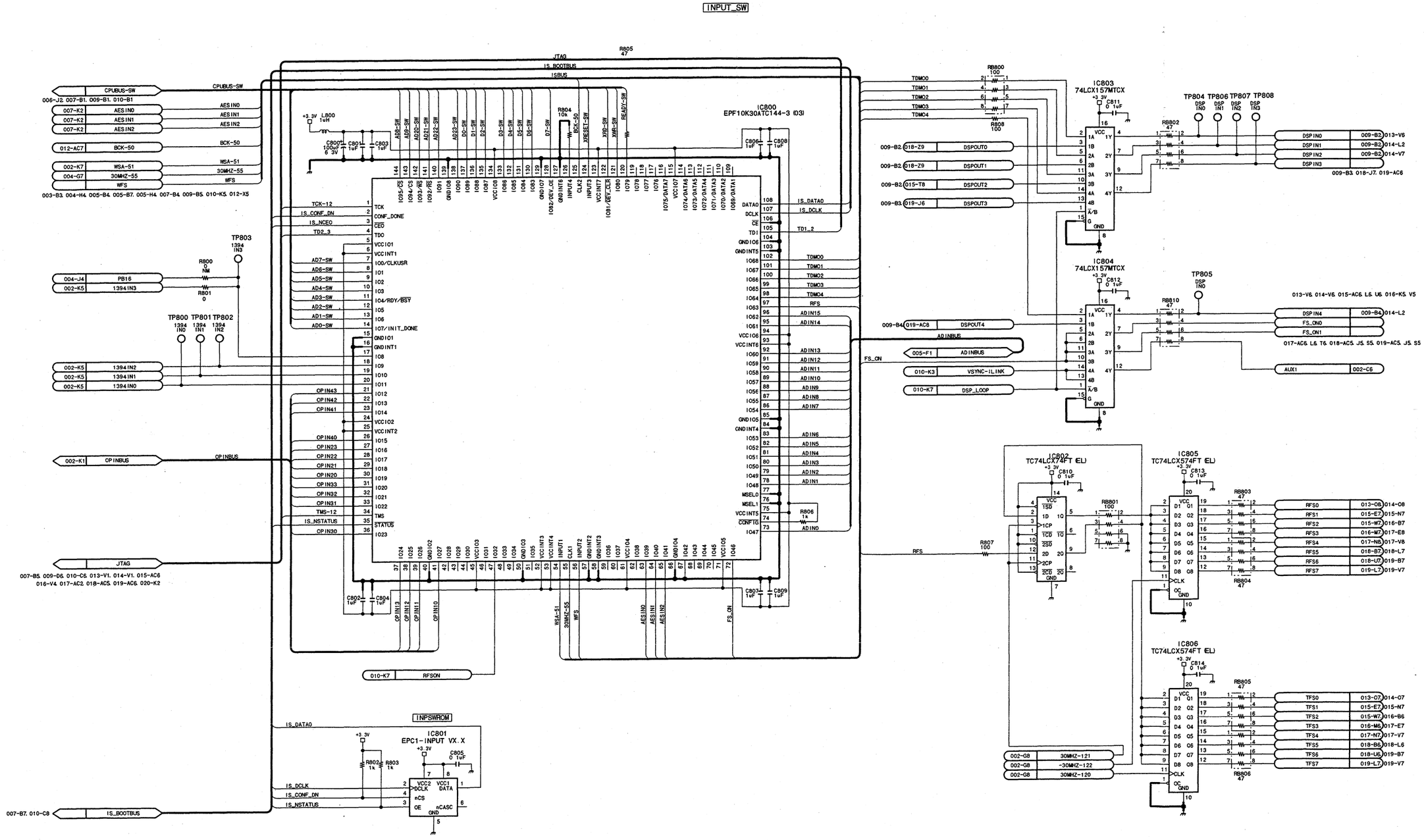

MIX-39 (8/21)

BOARD NO. 1-675-883-12,-13

GS-APX-397_MIX-39_003_008

MIX-39 (9/21)

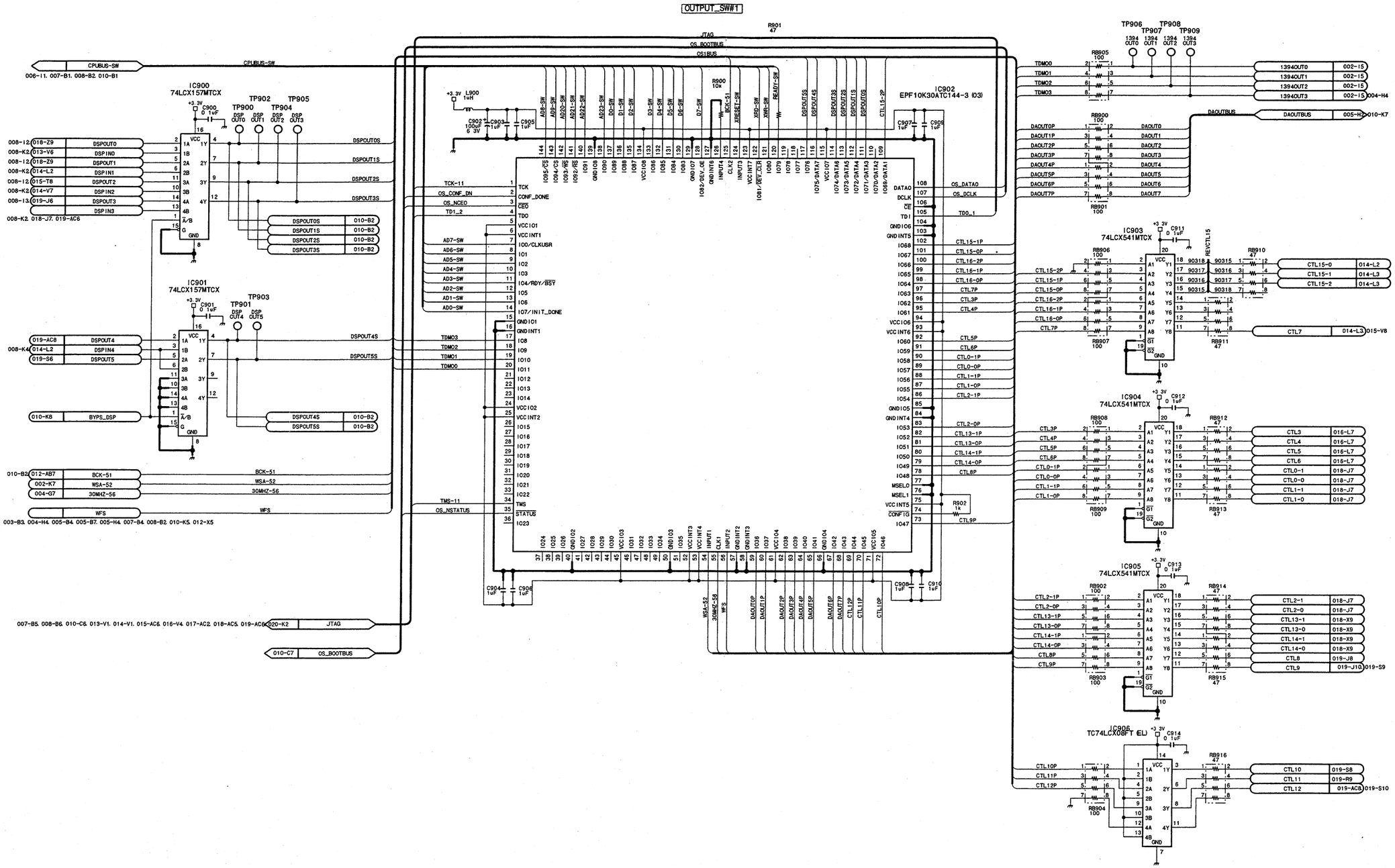

MIX-39 (9/21)

BOARD NO. 1-675-883-12,-13

GS-APX-397_MIX-39_003_009

MIX-39 (10/21)

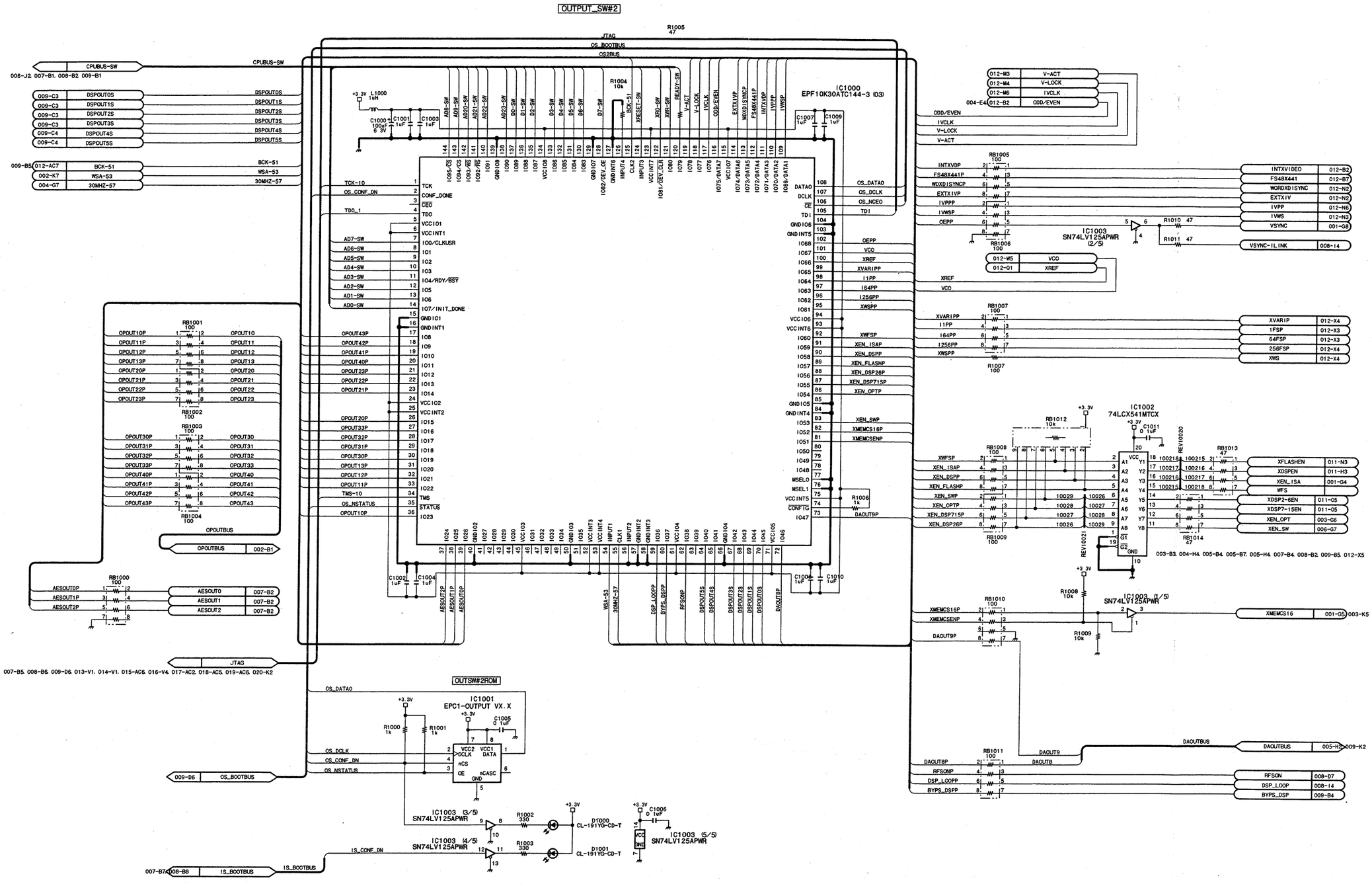

MIX-39 (10/21)

BOARD NO. 1-675-883-12,-13

GS-APX-397_MIX-39_003_010

MIX-39 (11/21)

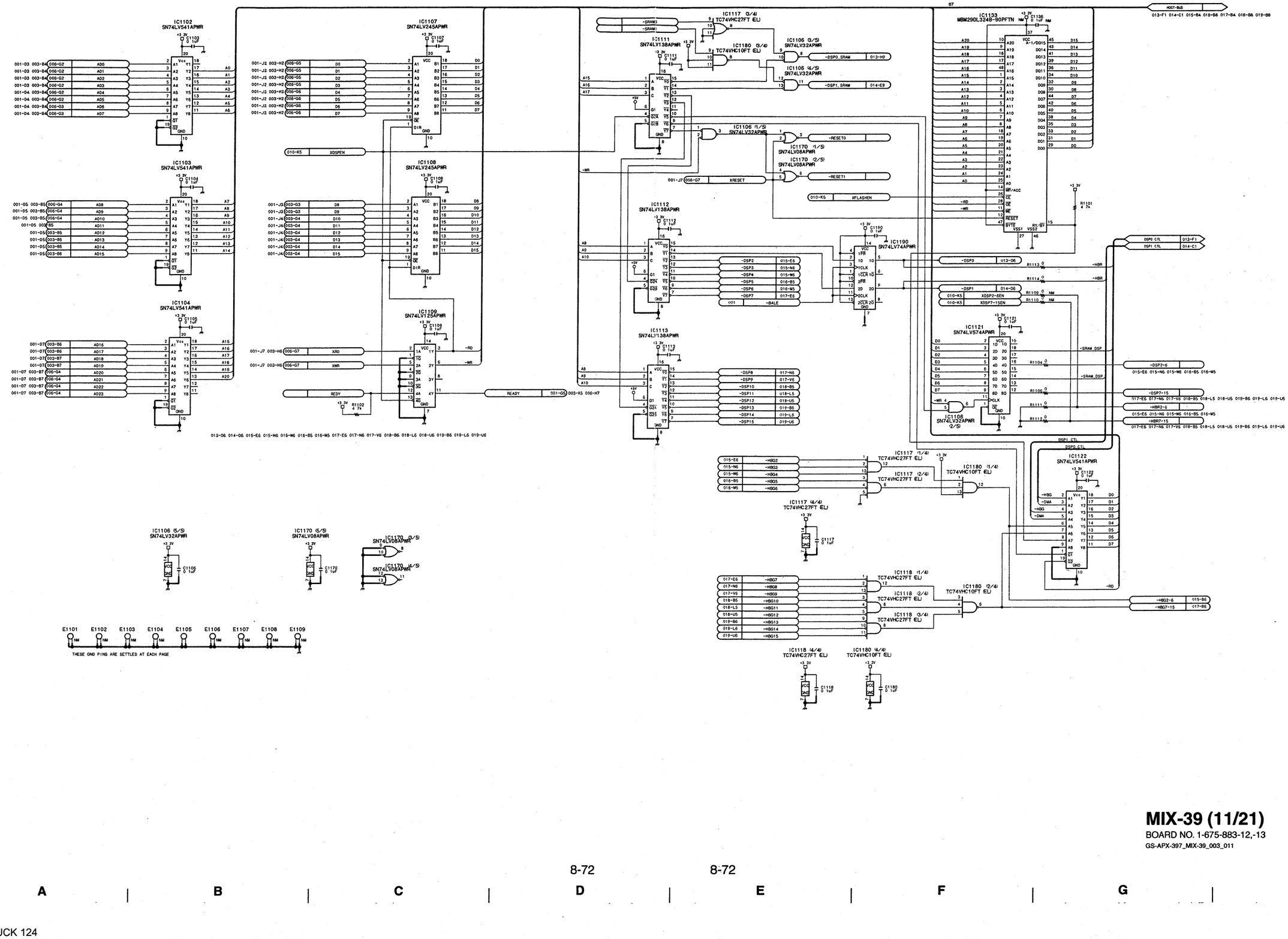

8-72

MIX-39 (11/21)

BOARD NO. 1-675-883-12,-13

GS-APX-397_MIX-39_003_011

DMX-R100/V2

MIX-39 (12/21)

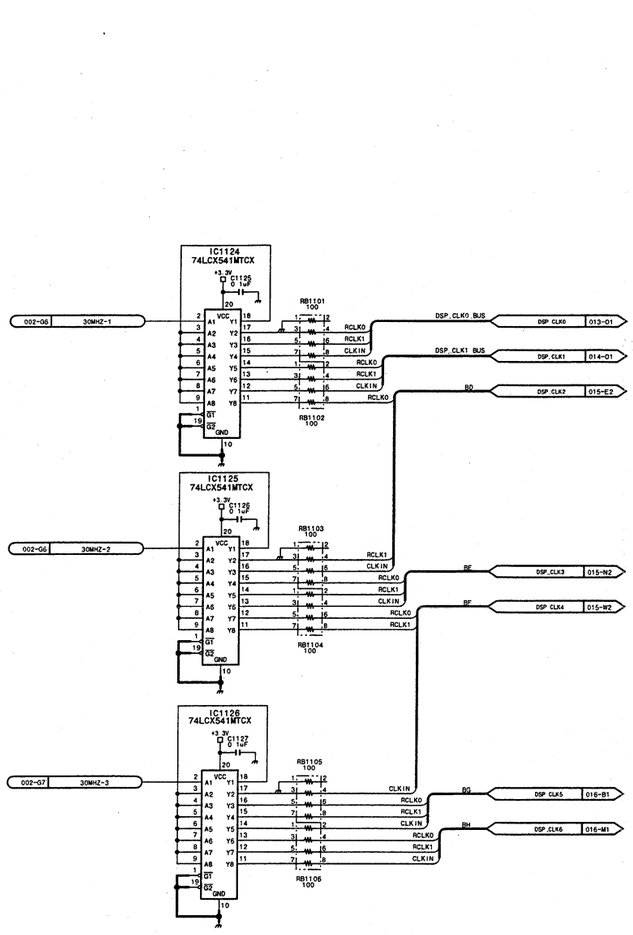
IC1124
74LCX541MTCX
C1125
0.1uF
002-G6
30MHZ-1
RB1101
100
DSP_CLK0_BUS
DSP_CLK0
013-01
DSP_CLK1_BUS
DSP_CLK1
014-01
DSP_CLK2
015-E2
RB1102
100
IC1125
74LCX541MTCX
C1126
0.1uF
002-G6
30MHZ-2
RB1103
100
DSP_CLK3
015-N2
DSP_CLK4
015-W2
RB1104
100
IC1126
74LCX541MTCX
C1127
0.1uF
002-G7
30MHZ-3
RB1105
100
DSP_CLK5
016-B1
DSP_CLK6
016-M1
RB1106
100
IC1129
74LCX541MTCX
C1132
0.1uF
002-G7
30MHZ-8
RB1108
100
DSP_CLK7
017-E2
DSP_CLK8
017-N2
DSP_CLK9
017-V2
RB1109
100
IC1130
74LCX541MTCX
C1133
0.1uF
002-G7
30MHZ-9
RB1110
100
DSP_CLK10
018-B1
DSP_CLK11
018-L1
RB1111
100
IC1131
74LCX541MTCX
C1134
0.1uF
002-G8
30MHZ-10
RB1112
100
DSP_CLK12
018-U1
DSP_CLK13
019-B1
RB1113
100
IC1132
74LCX541MTCX
C1135
0.1uF
002-G8
30MHZ-11
RB1114
100
DSP_CLK14
019-L1
DSP_CLK15
019-U1
30MHZ-110
020-B4
RB1115
100

MIX-39 (13/21)

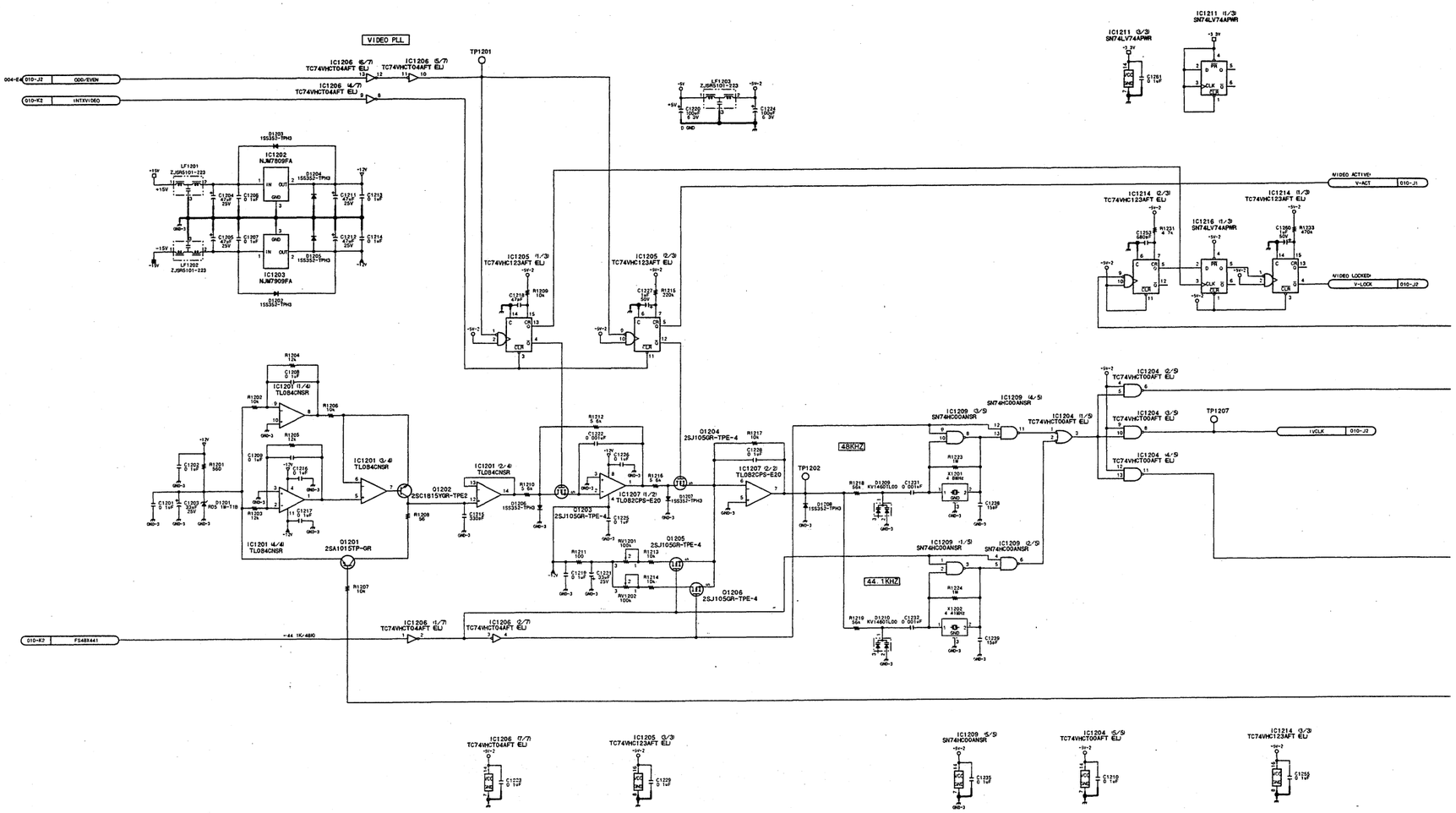

8-74

MIX-39 (13/21)

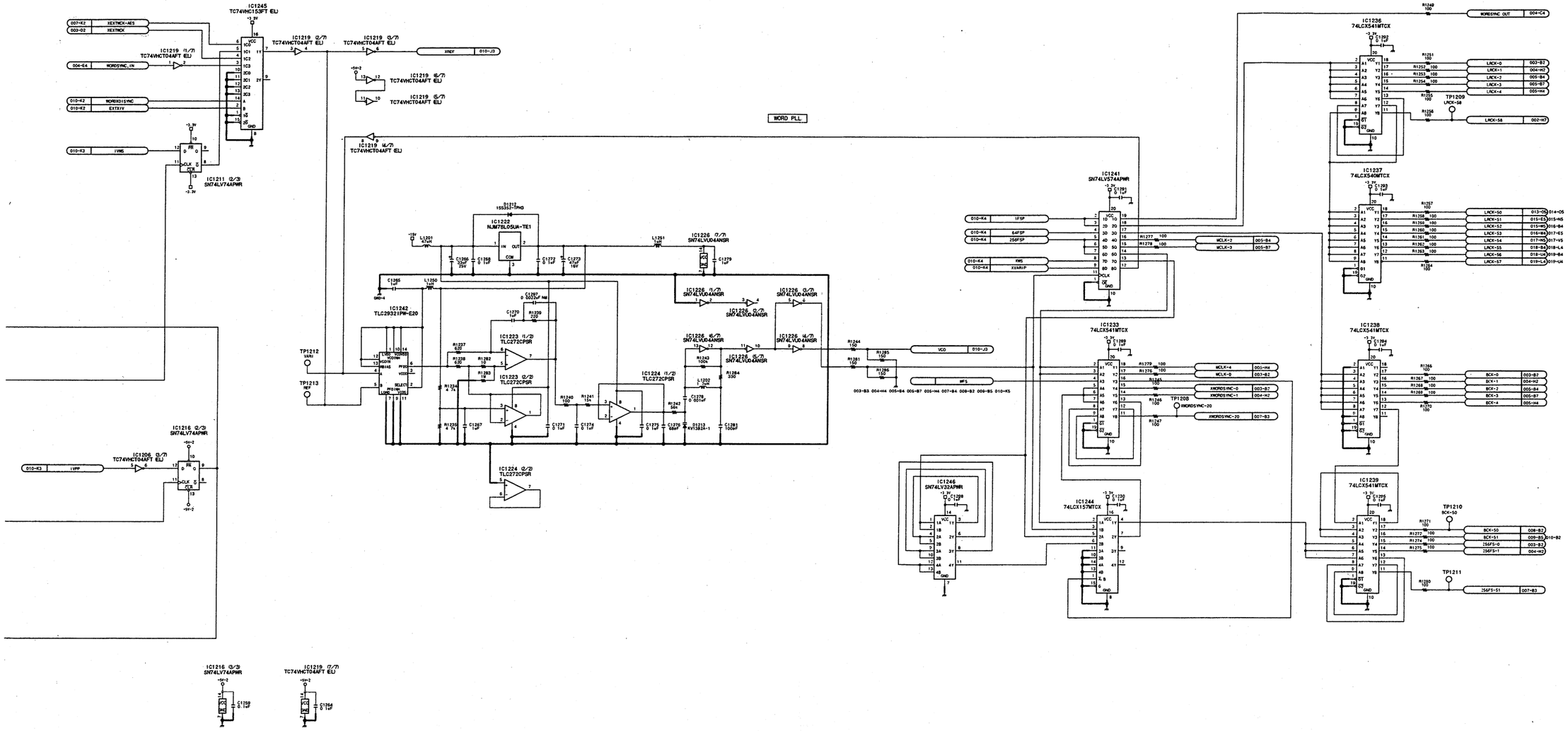
WORD PLL
IC1245 TC74VHC153FT (EL)
IC1219 (1/7) TC74VHC04AFT (EL)
IC1219 (2/7) TC74VHC04AFT (EL)
IC1219 (3/7) TC74VHC04AFT (EL)
IC1219 (4/7) TC74VHC04AFT (EL)
IC1219 (5/7) TC74VHC04AFT (EL)
IC1219 (6/7) TC74VHC04AFT (EL)
IC1219 (7/7) TC74VHC04AFT (EL)
IC1211 (2/3) SN74LV74APWR
IC1216 (3/3) SN74LV74APWR
IC1222 NJM78L05UA-TE1
IC1226 (1/7) SN74LVU04ANSR
IC1226 (2/7) SN74LVU04ANSR
IC1226 (3/7) SN74LVU04ANSR
IC1226 (4/7) SN74LVU04ANSR
IC1226 (5/7) SN74LVU04ANSR
IC1226 (6/7) SN74LVU04ANSR
IC1226 (7/7) SN74LVU04ANSR
IC1242 TLC29321PW-E20
IC1223 (1/2) TLC272CPSR
IC1223 (2/2) TLC272CPSR
IC1224 (1/2) TLC272CPSR
IC1224 (2/2) TLC272CPSR
IC1241 SN74LV574APWR
IC1246 SN74LV32APWR
IC1244 74LCX157MTCX
IC1233 74LCX541MTCX
IC1236 74LCX541MTCX
IC1237 74LCX540MTCX
IC1238 74LCX541MTCX
IC1239 74LCX541MTCX
TP1208
TP1209
TP1210
TP1211
TP1212
TP1213
WORDSYNC OUT
MCLK-2
MCLK-3
MCLK-4
MCLK-5
XWORDSYNC-0
XWORDSYNC-1
XWORDSYNC-2D
LRCK-0
LRCK-1
LRCK-2
LRCK-3
LRCK-4
LRCK-5B
BCK-0
BCK-1
BCK-2
BCK-3
BCK-4
BCK-5
BCK-5B
256FS-0
256FS-1
256FS-S1
VCO
MFS

MIX-39 (14/21)

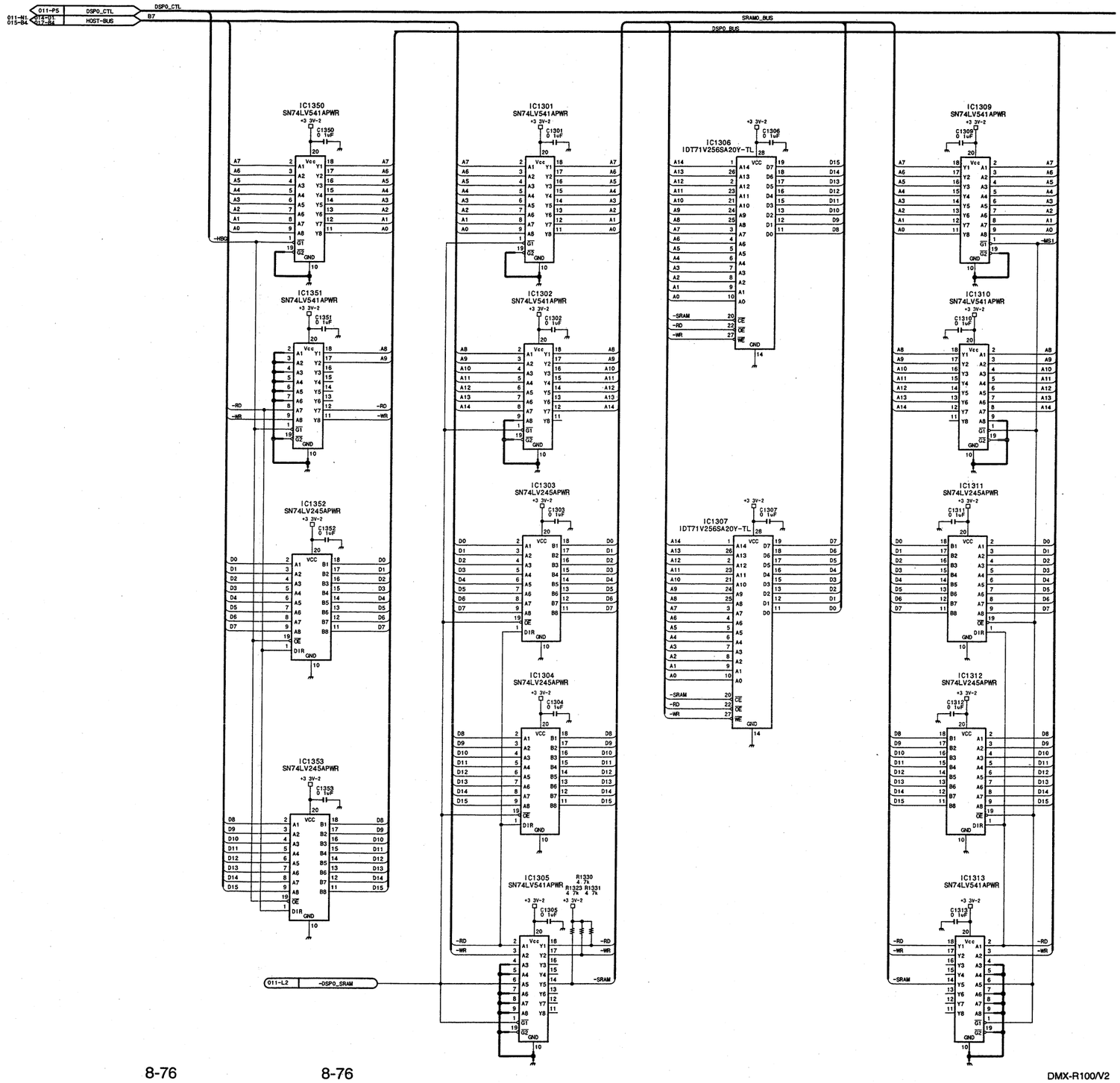

8-76

DMX-R100/V2

MIX-39 (14/21)

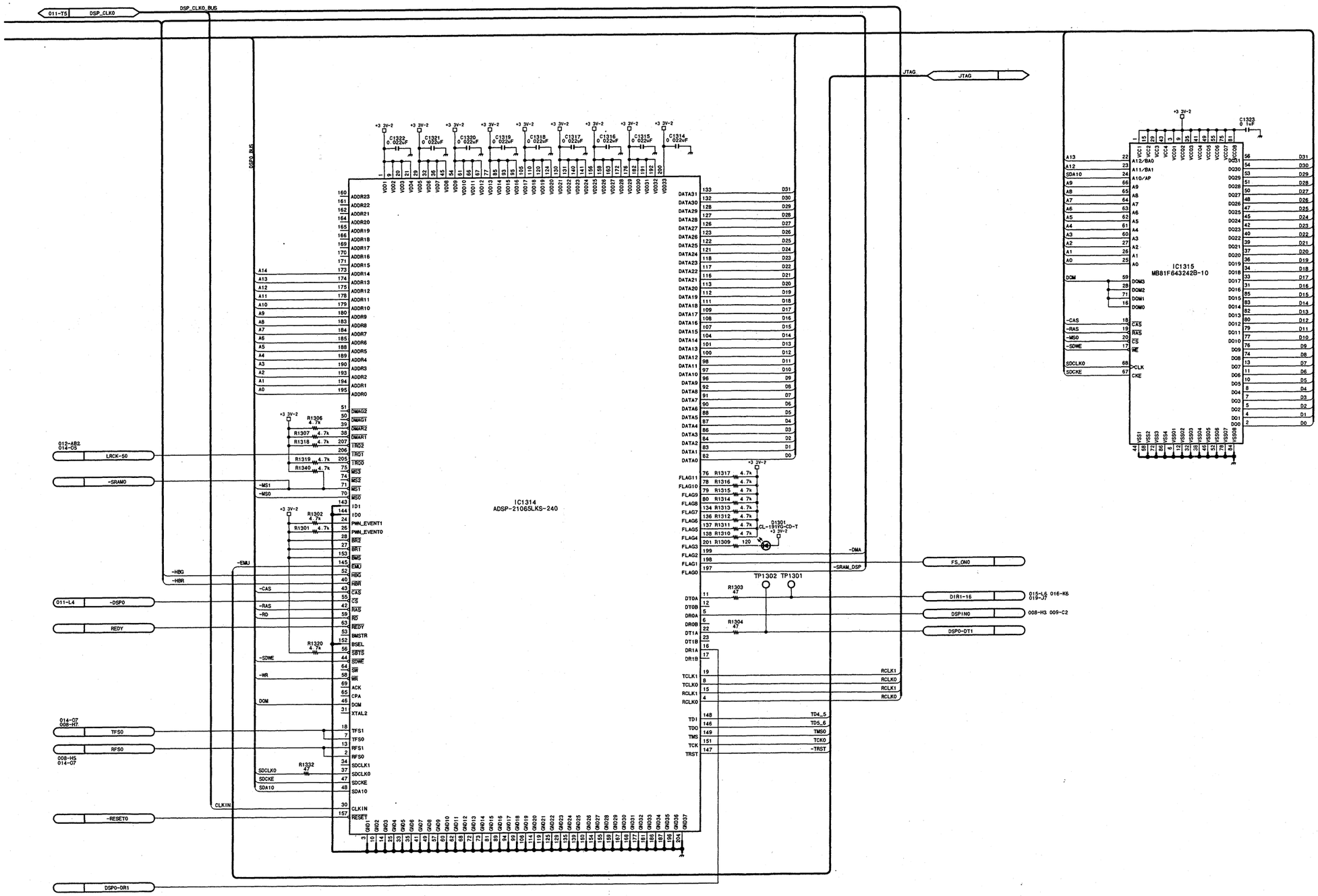

MIX-39 (14/21)
BOARD NO. 1-675-883-12,-13
GS-APX-397_MIX-39_003_013

MIX-39 (15/21)

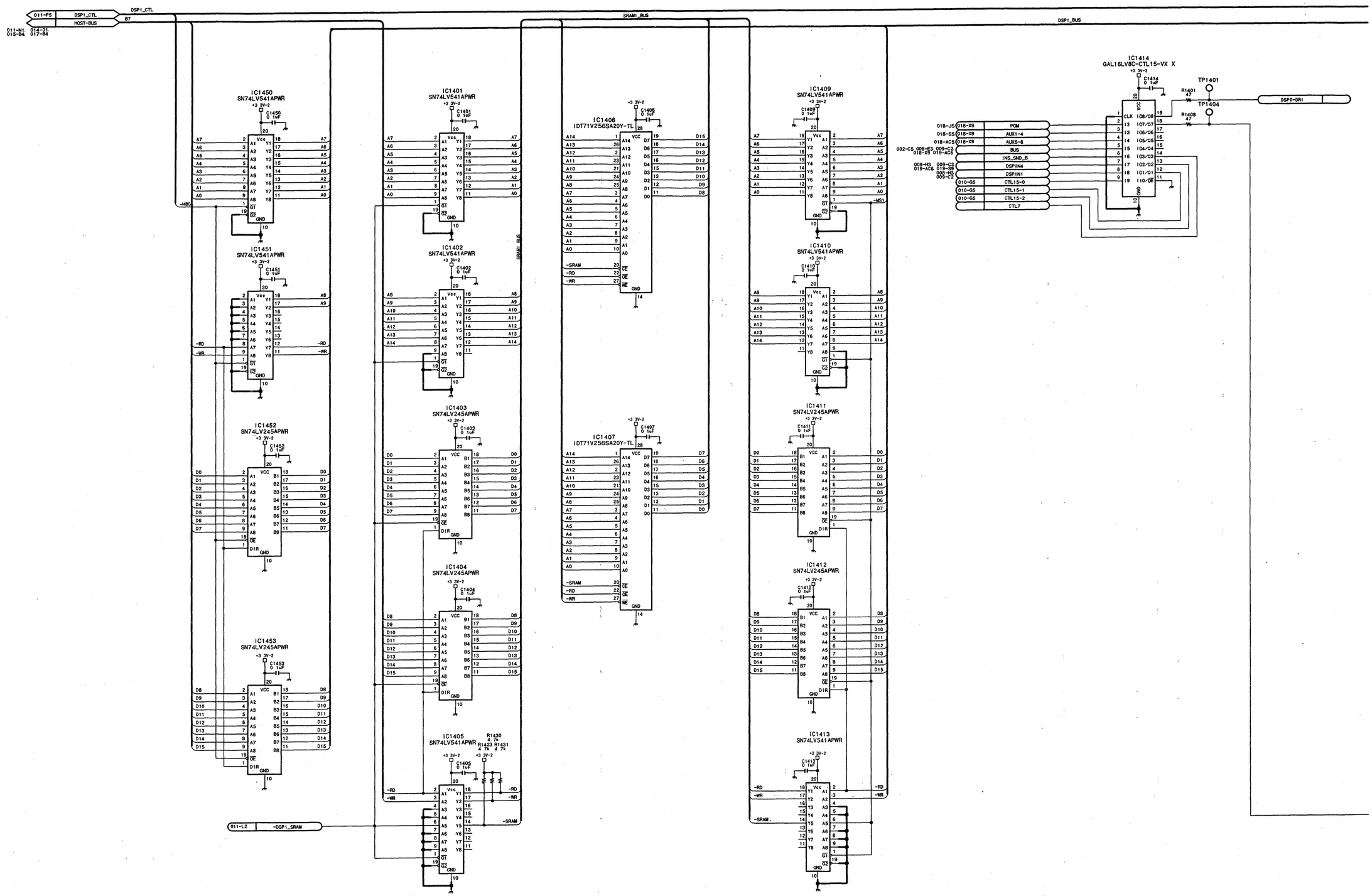

8-78

8-78

DMX-R100/V2

MIX-39 (15/21)

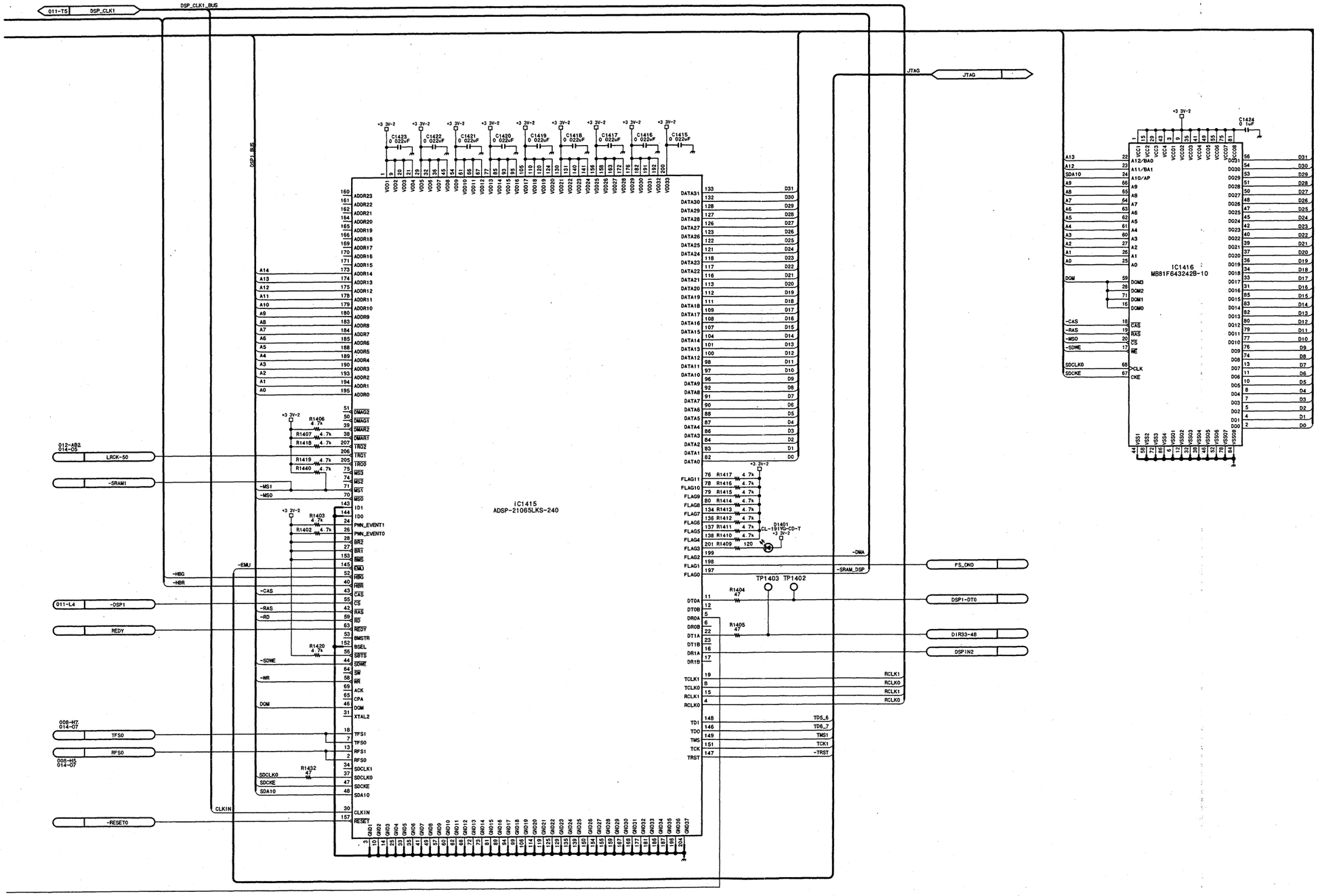

MIX-39 (15/21)
BOARD NO. 1-675-883-12,-13
GS-APX-397_MIX-39_003_014

MIX-39 (16/21)

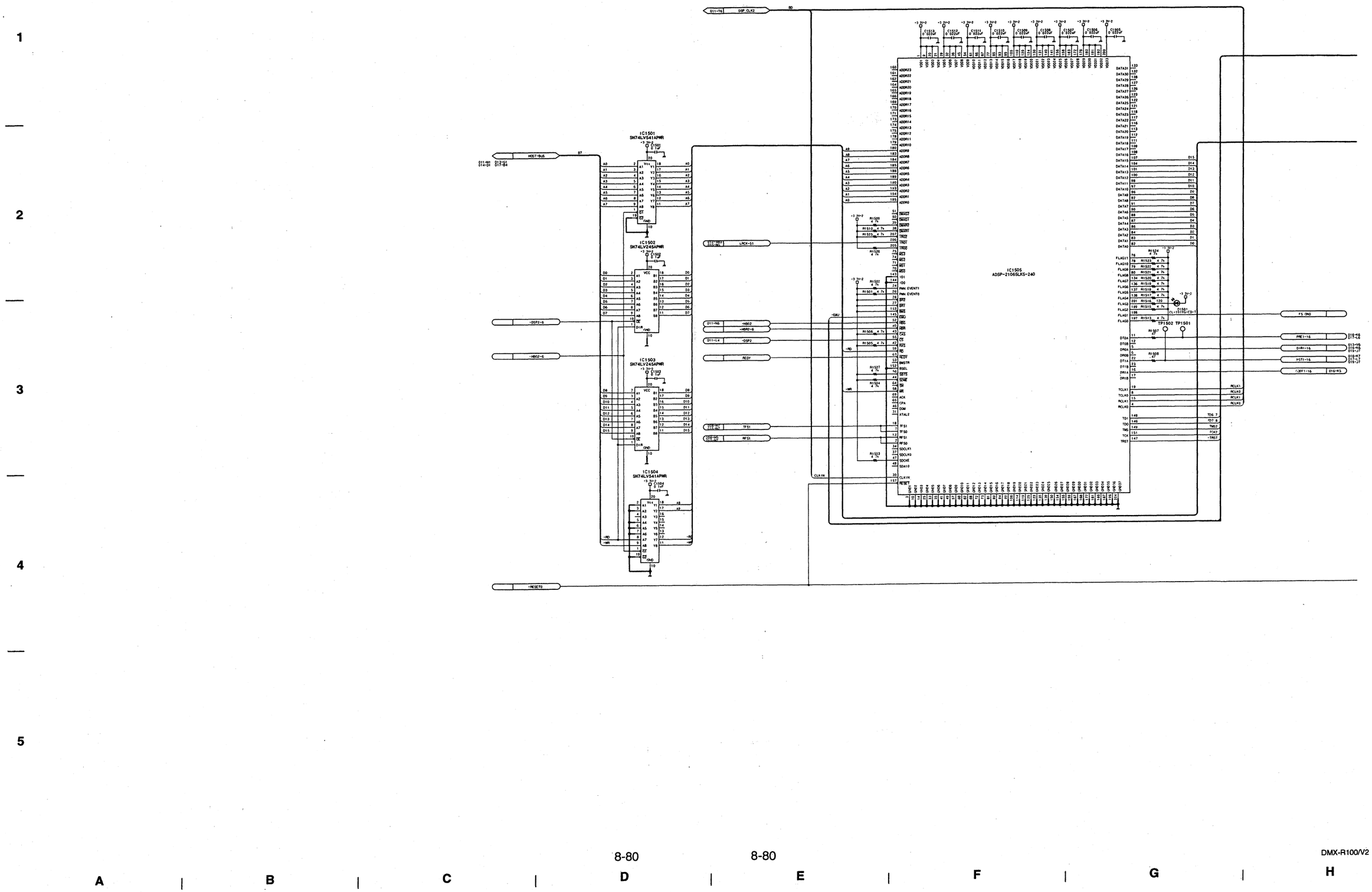
IC1501
SN74LV541APWR
IC1502
SN74LV245APWR
IC1503
SN74LV245APWR
IC1504
SN74LV541APWR
IC1505
ADSP-2106SLKS-240
TP1502 TP1501
8-80
8-80
DMX-R100/V2
A
B
C
D
E
F
G
H

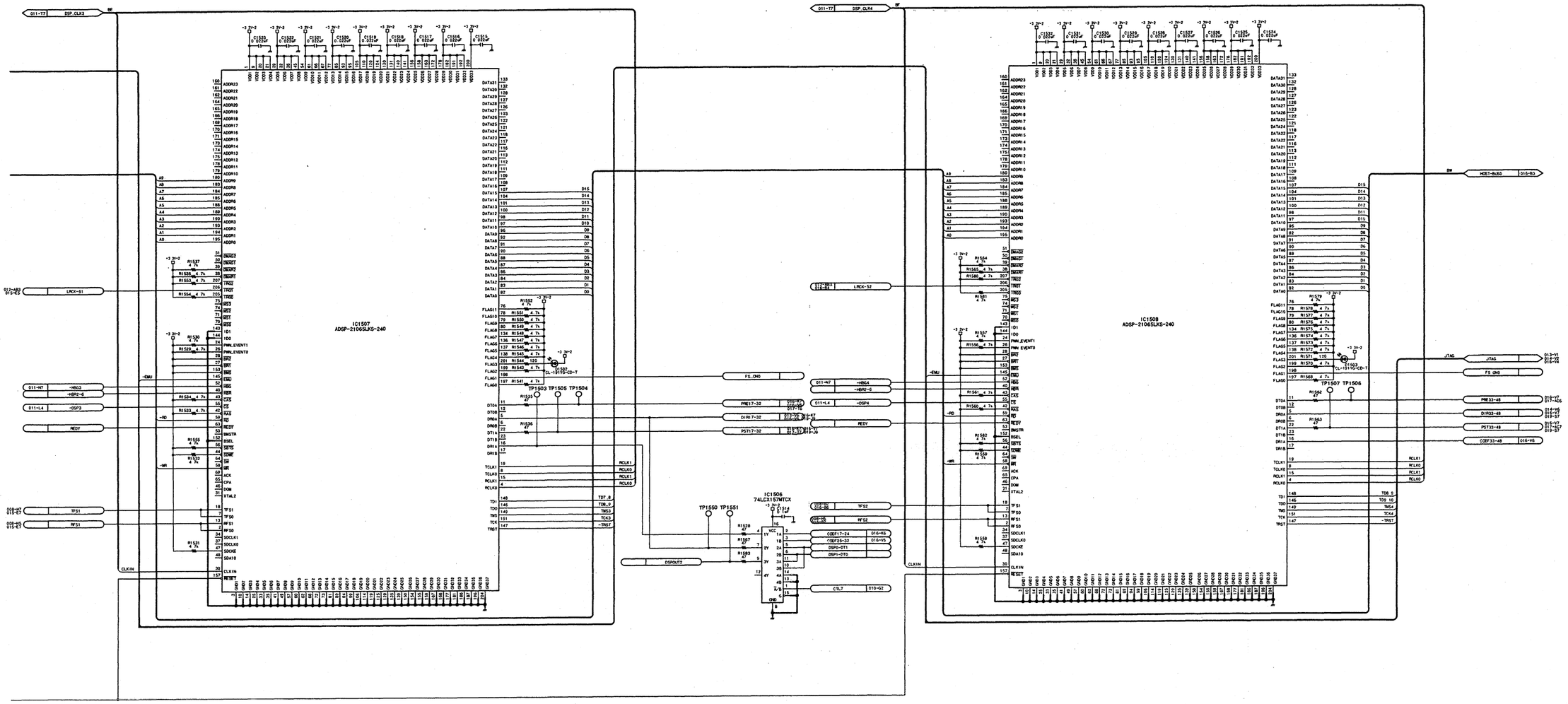

MIX-39 (16/21)
BOARD NO. 1-675-883-12,-13
GS-APX-397_MIX-39_003_015

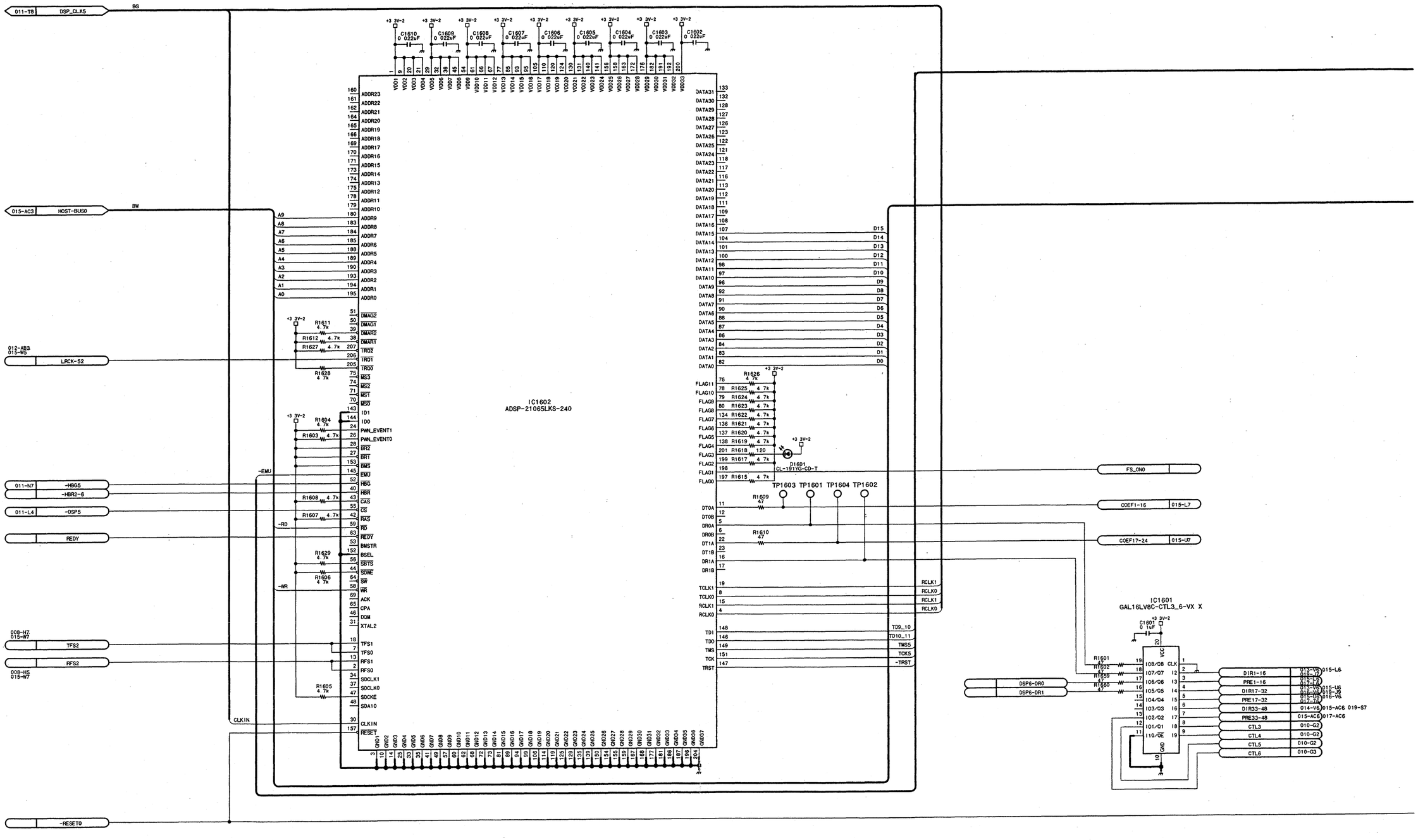
011-T8 DSP_CLK5
BG
015-AC3 HOST-BUS0
BW
012-AB3 015-W5 LRCK-52
011-N7 -HBG5
-HBR2-6
011-L4 -DSP5
REDY
008-N7 015-W7 TFS2
RFS2
008-H5 015-W7
-RESET0
CLKIN
-EMU
-RD
-WR
IC1602
ADSP-21065LKS-240
IC1601
GAL16LV8C-CTL3_6-VX X
FS_ON0
COEF1-16 015-L7
COEF17-24 015-U7
DSP6-DR0
DSP6-DR1
DIR1-16
PRE1-16
DIR17-32
PRE17-32
DIR33-48
PRE33-48
CTL3 010-G2
CTL4 010-G2
CTL5 010-G2
CTL6 010-G3
D1601 CL-191YG-CD-T
TP1603 TP1601 TP1604 TP1602
RCLK1
RCLK0
TD9_10
TD10_11
TMS5
TCK5
-TRST

MIX-39 (17/21)

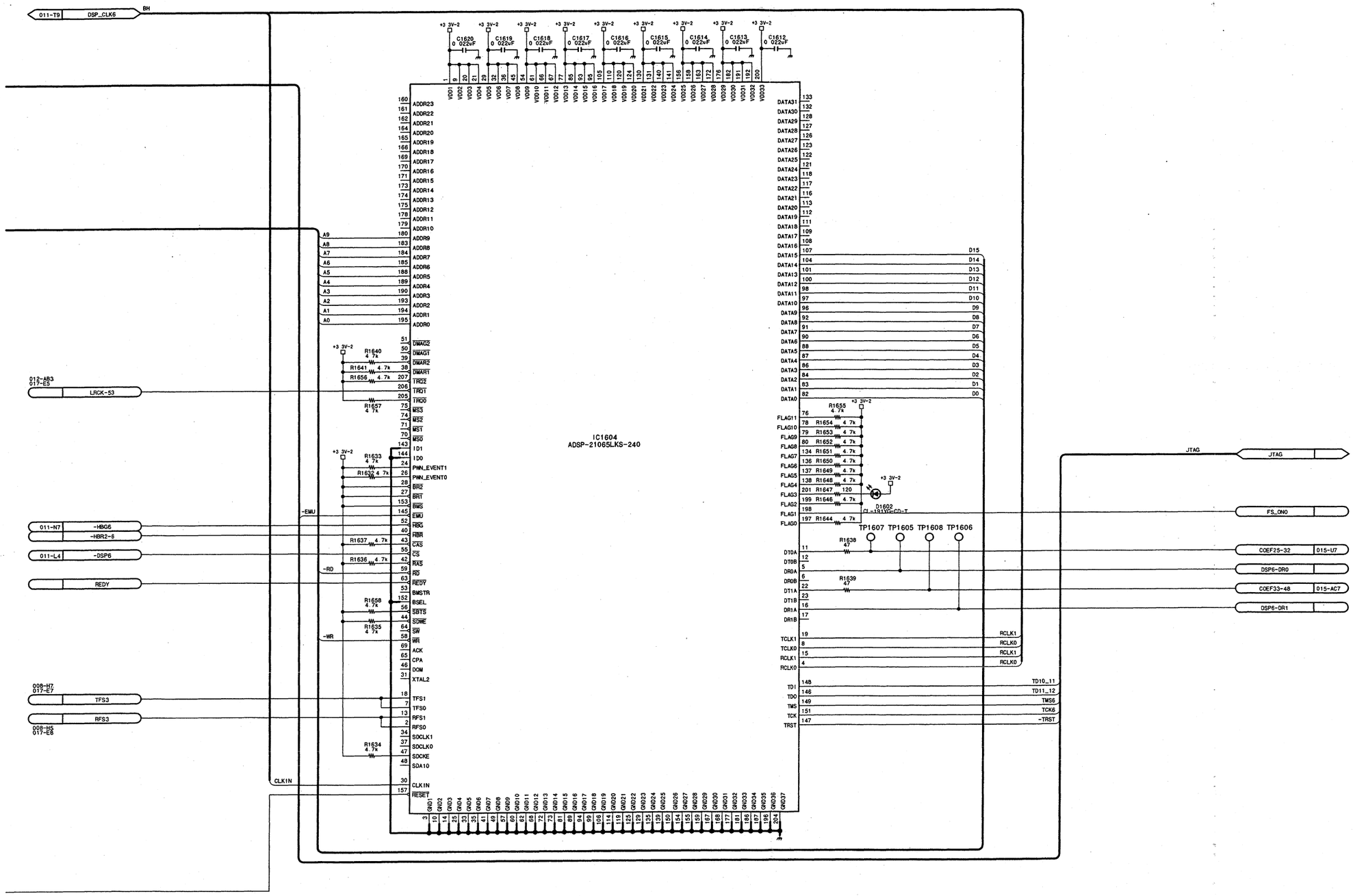

MIX-39 (17/21)
BOARD NO. 1-675-883-12,-13
GS-APX-397_MIX-39_003_016

MIX-39 (18/21)

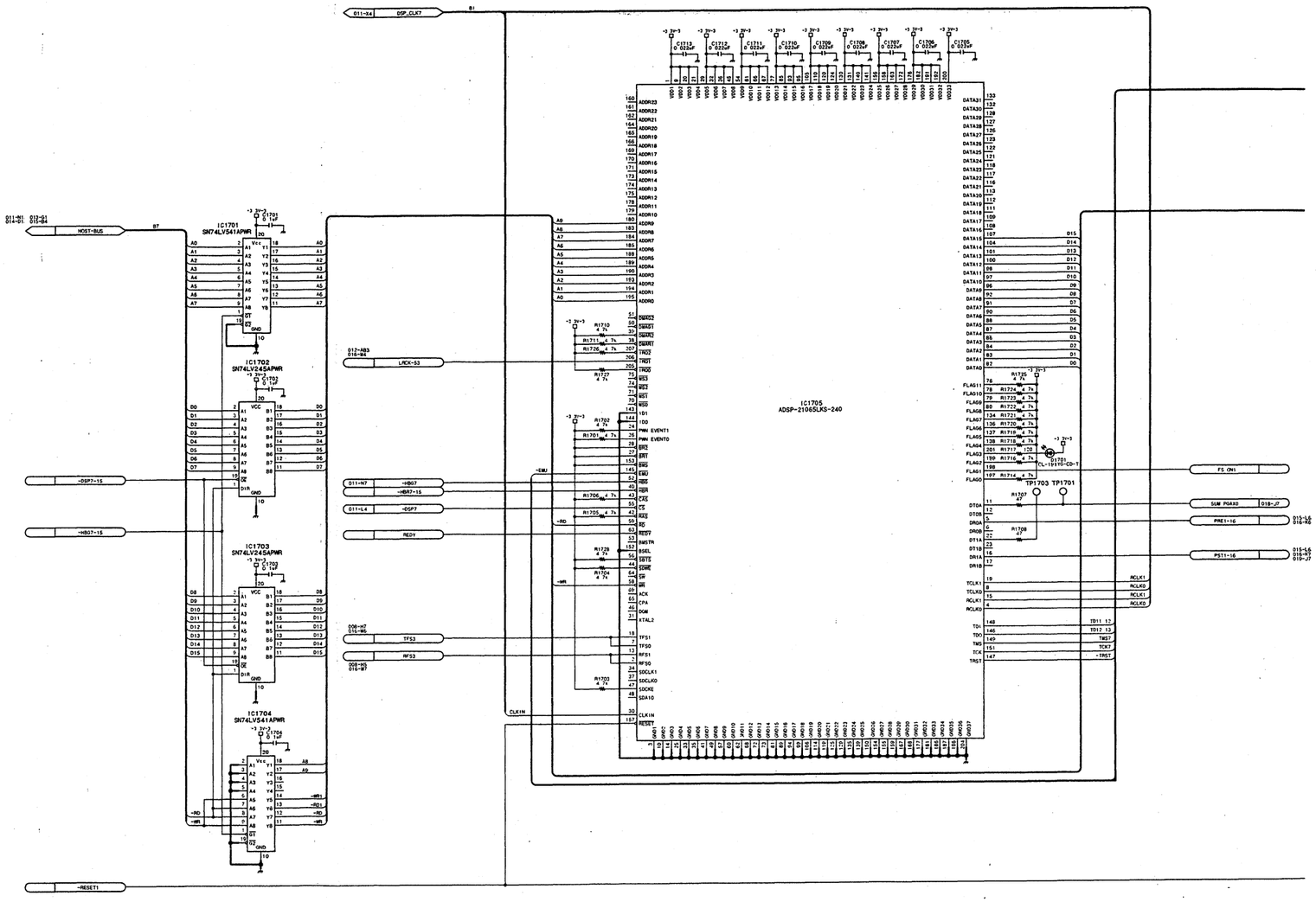

8-84

DMX-R100/V2

MIX-39 (18/21)

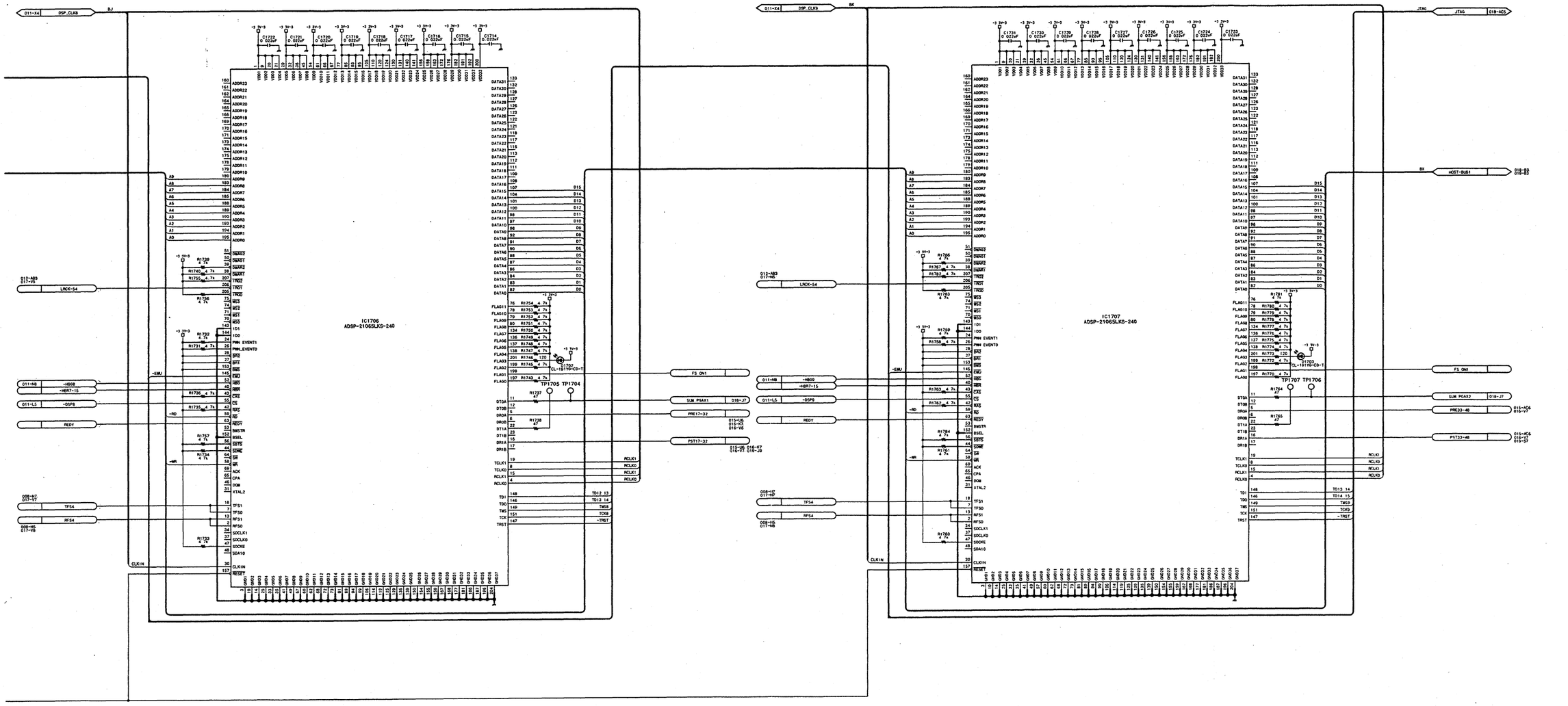

MIX-39 (18/21)
BOARD NO. 1-675-883-12,-13
GS-APX-397_MIX-39_003_017

MIX-39 (19/21)

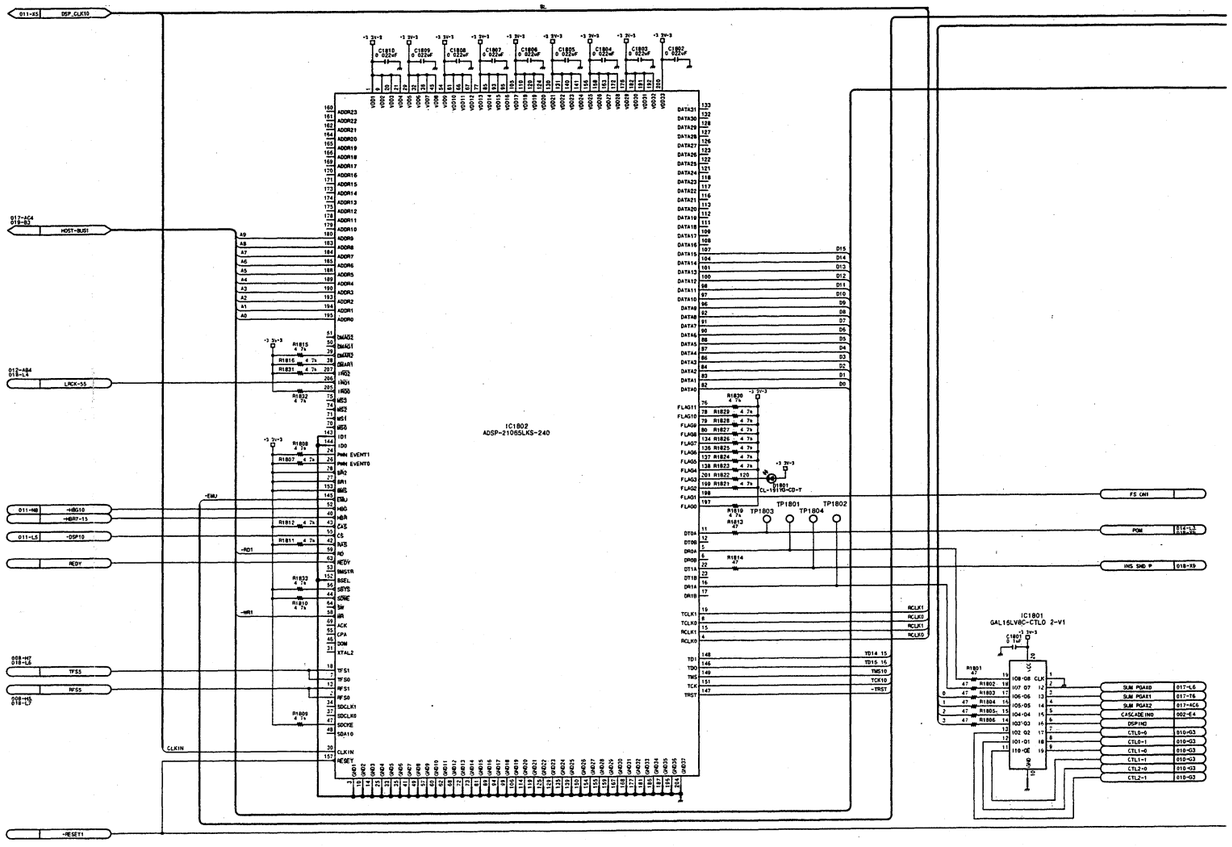

8-86

MIX-39 (19/21)

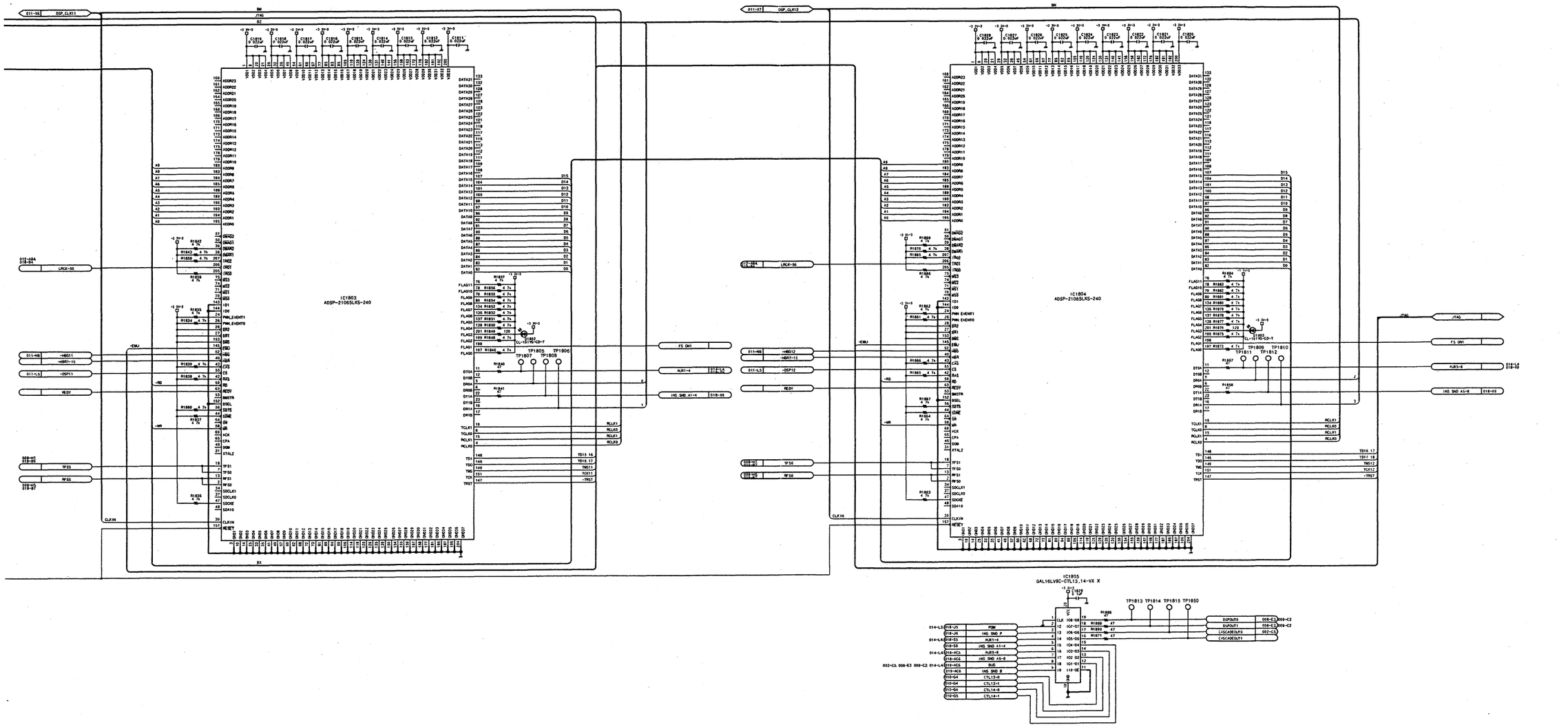

MIX-39 (19/21)
BOARD NO. 1-675-883-12,-13
GS-APX-397_MIX-39_003_018

MIX-39 (20/21)

1

2

3

4

5

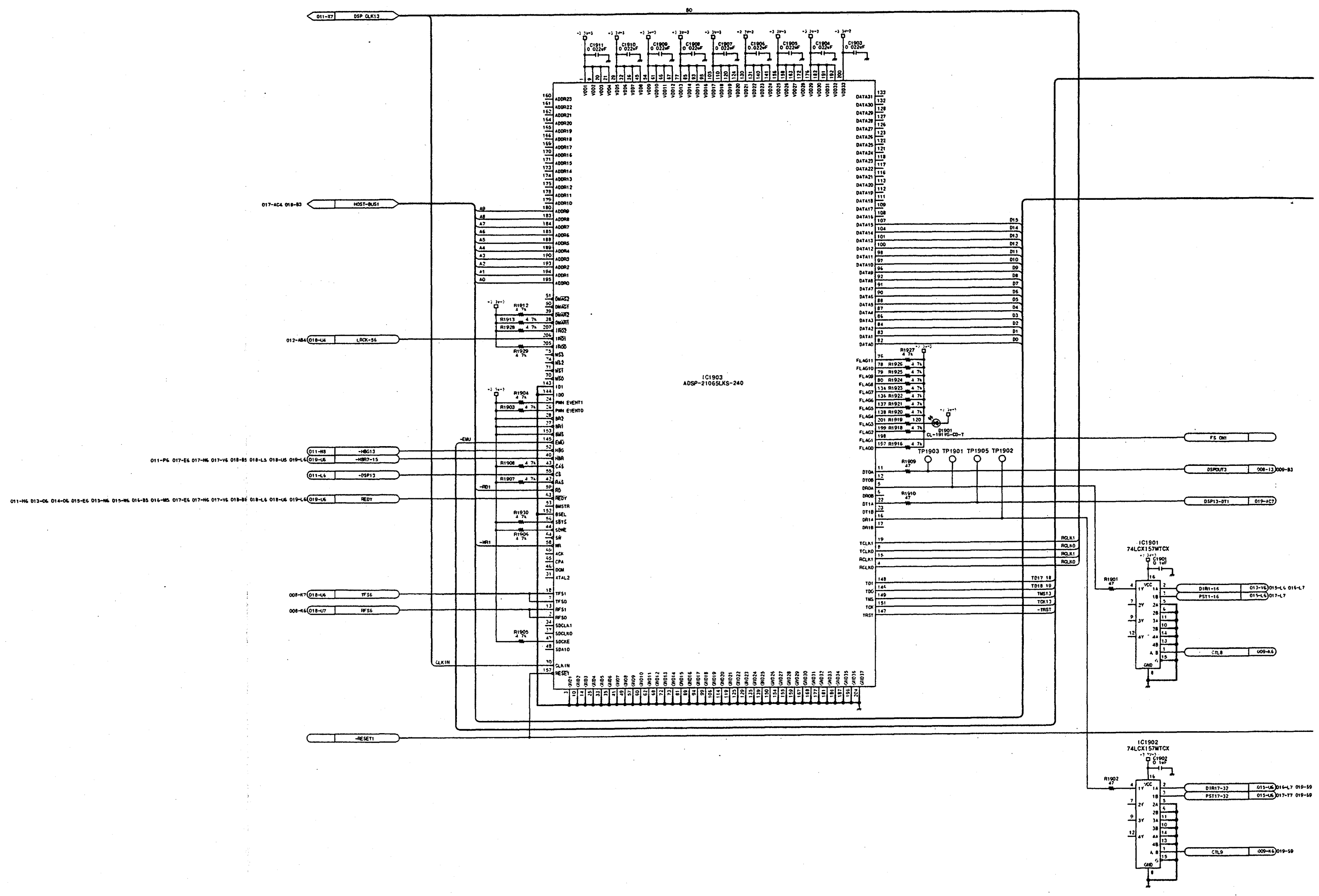

8-88

A | B | C | D | E | F | G | H

SONY-SP1439 / DRUCK 140

MIX-39 (20/21)

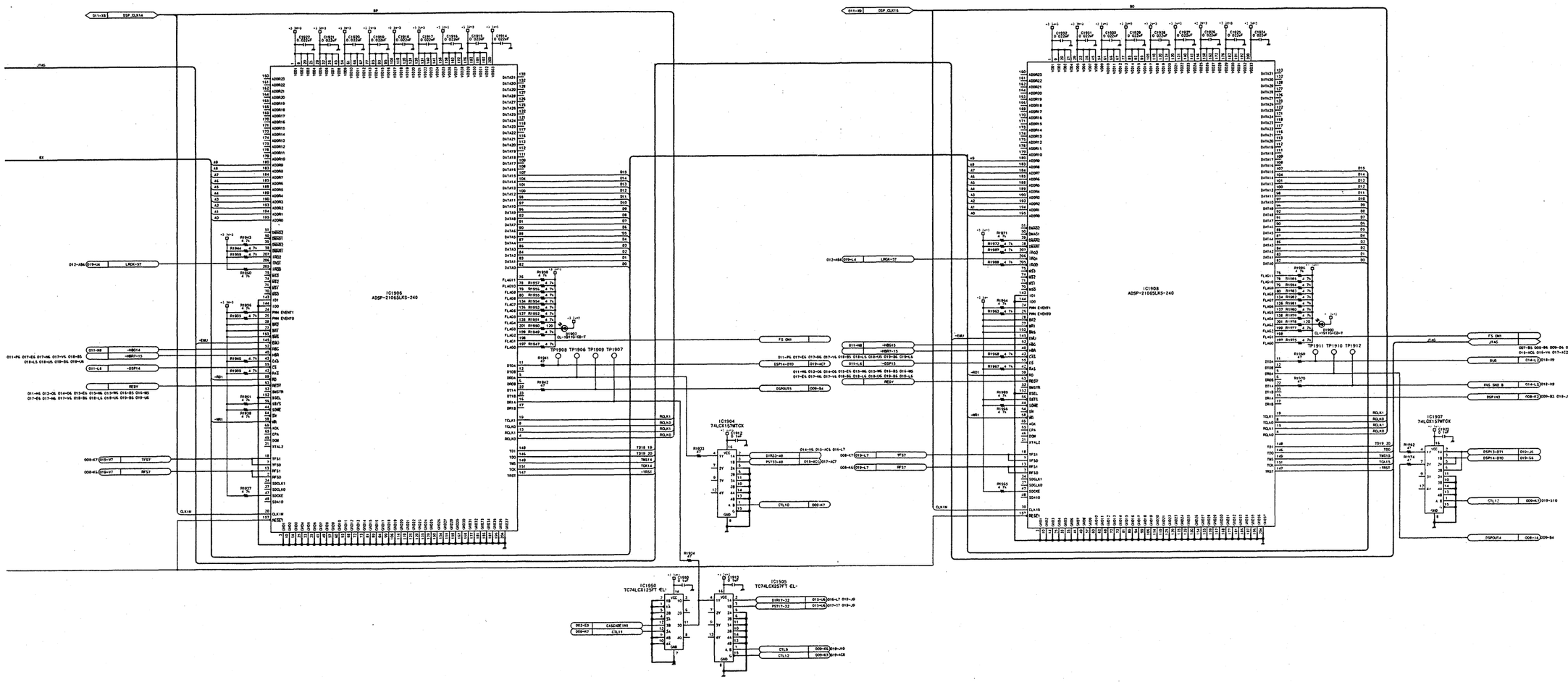

MIX-39 (20/21)

BOARD NO. 1-675-883-12,-13

GS-APX-397_MIX-39_003_019

MIX-39 (21/21)

JTAG/IEEE1149.1IF

007-B5, 008-B6, 009-D6, 010-C6, 013-V1, 014-V1, 015-AC6, 016-V4, 017-AC2, 018-AC5, 019-AC6

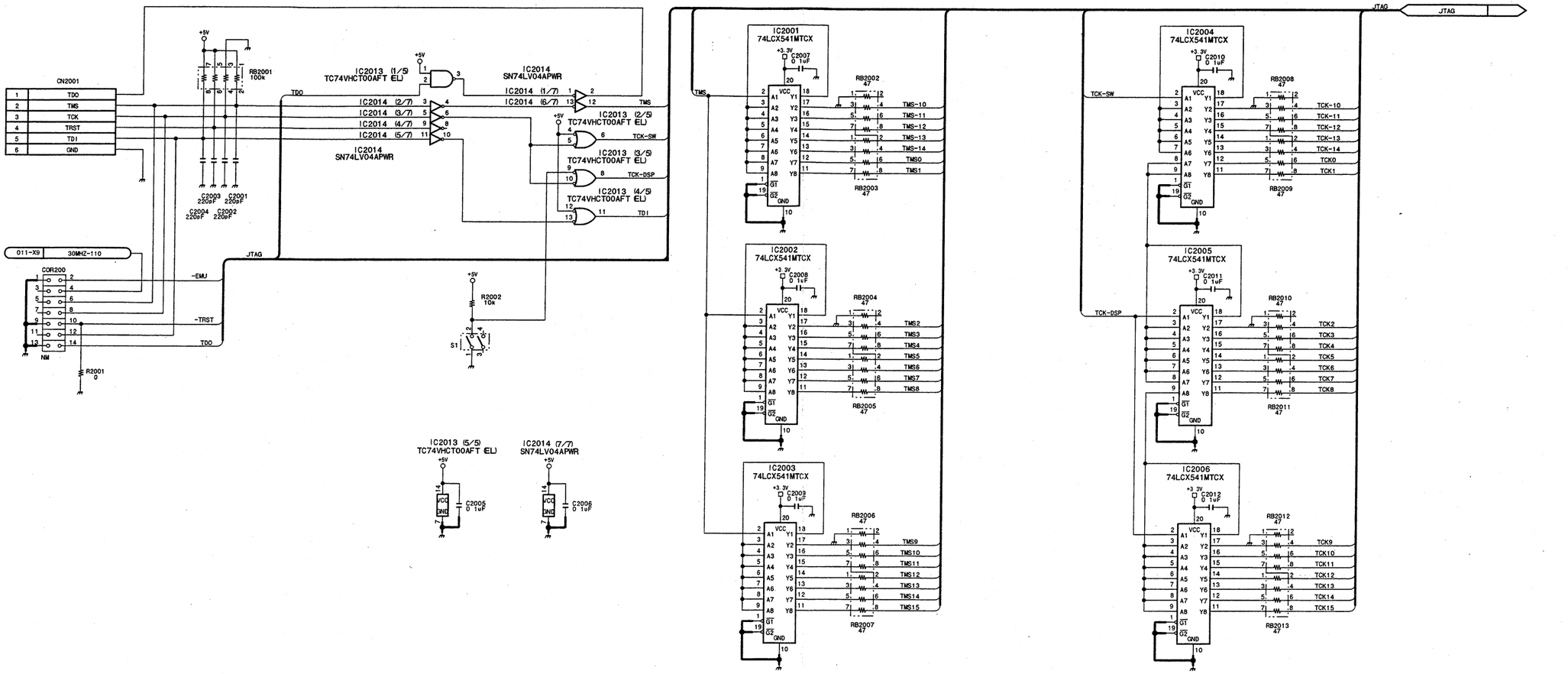

MIX-39 (21/21)

BOARD NO. 1-675-883-12,-13

GS-APX-397_MIX-39_003_020

8-90 8-90

DMX-R100/V2

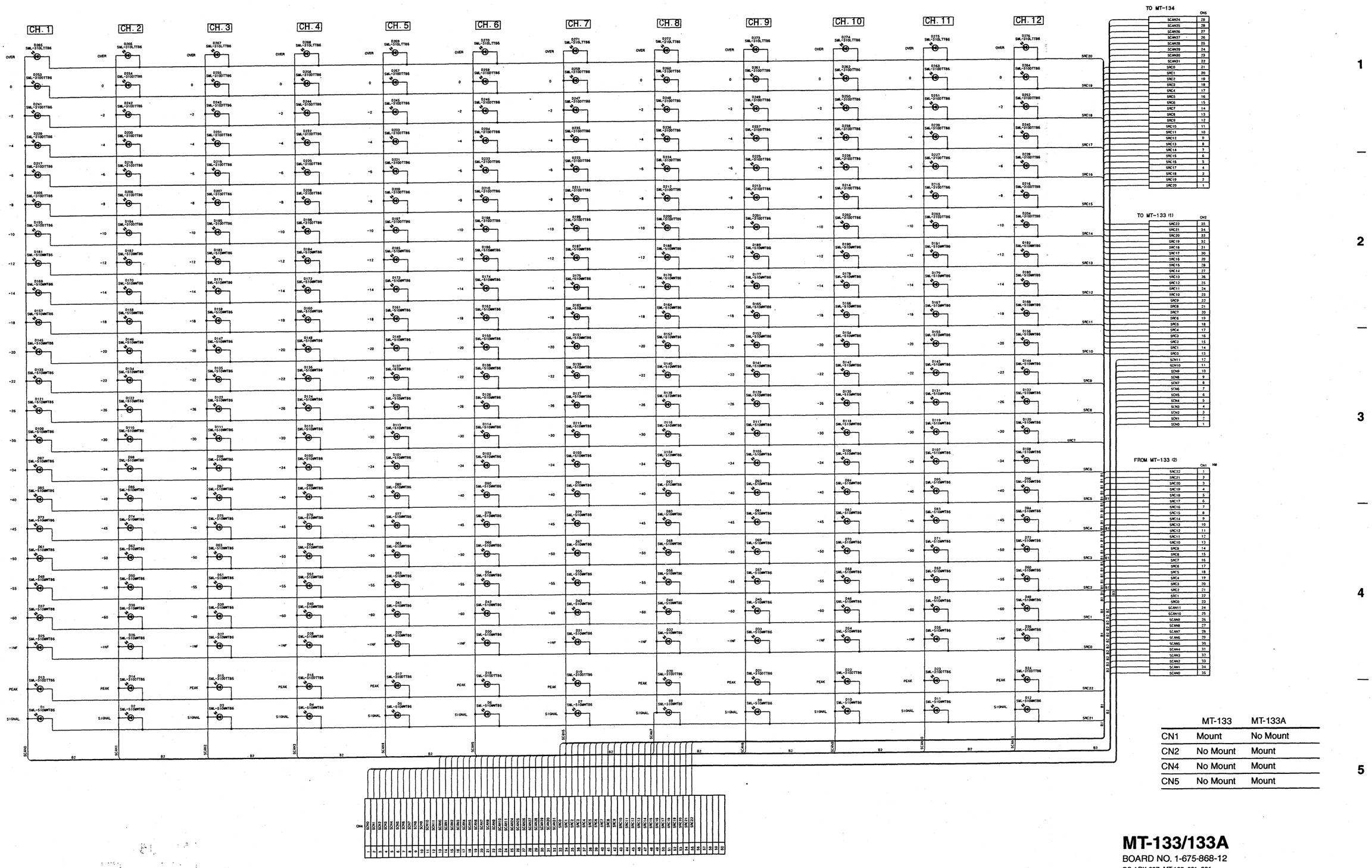

	MT-133	MT-133A
CN1	Mount	No Mount
CN2	No Mount	Mount
CN4	No Mount	Mount
CN5	No Mount	Mount

MT-133/133A

BOARD NO. 1-675-868-12

GS-APX-397_MT-133_001_001

DMX-R100/V2

8-91 8-91

SONY-SP1439 / DRUCK 143

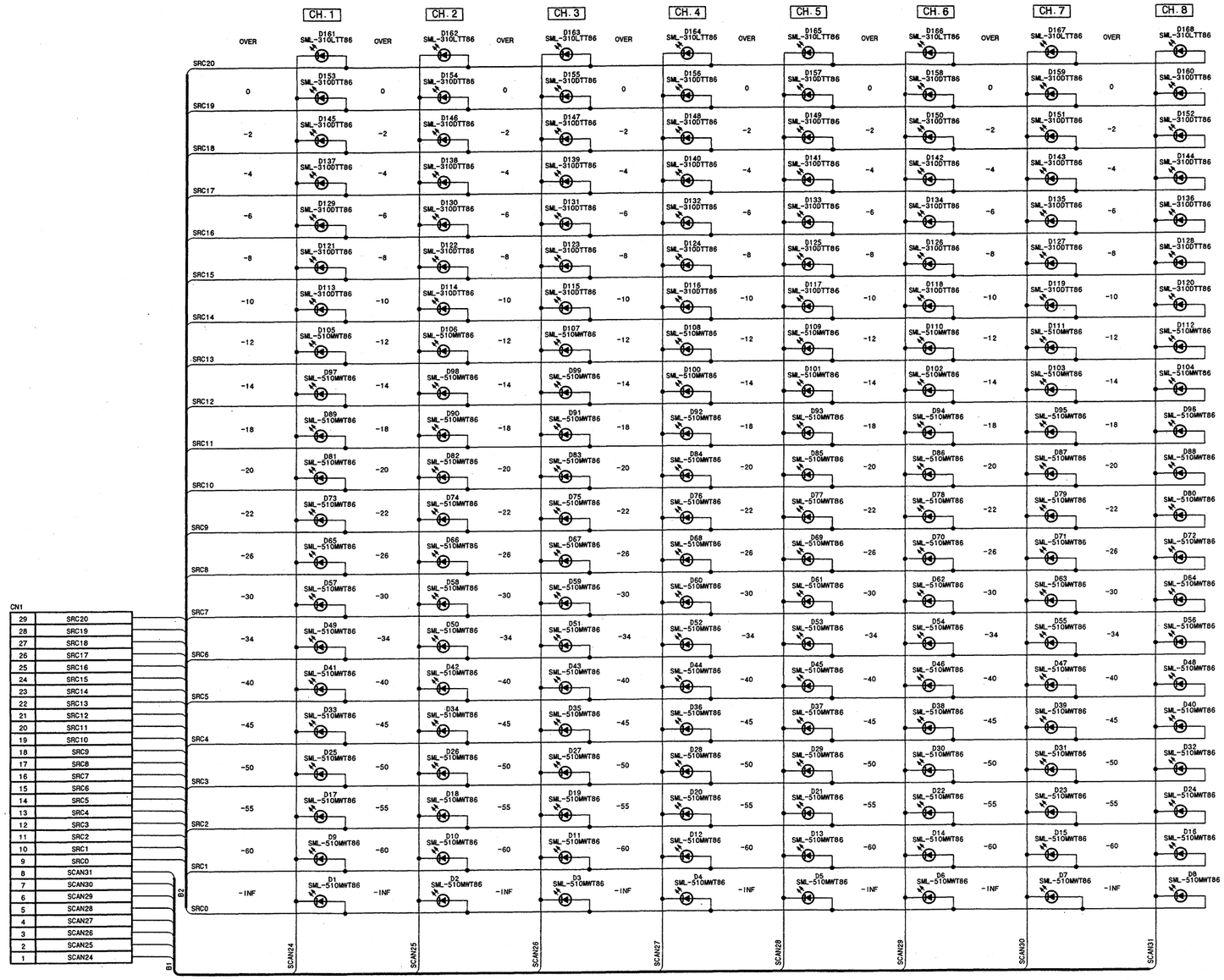

29	SRC20
28	SRC19
27	SRC18
26	SRC17
25	SRC16
24	SRC15
23	SRC14
22	SRC13
21	SRC12
20	SRC11
19	SRC10
18	SRC9
17	SRC8
16	SRC7
15	SRC6
14	SRC5
13	SRC4
12	SRC3
11	SRC2
10	SRC1
9	SRC0
8	SCAN31
7	SCAN30
6	SCAN29
5	SCAN28
4	SCAN27
3	SCAN26
2	SCAN25
1	SCAN24

MT-134
BOARD NO. 1-675-873-11,-12
GS-APX-397_MT-134_001_001

8-92 8-92

DMX-R100/V2

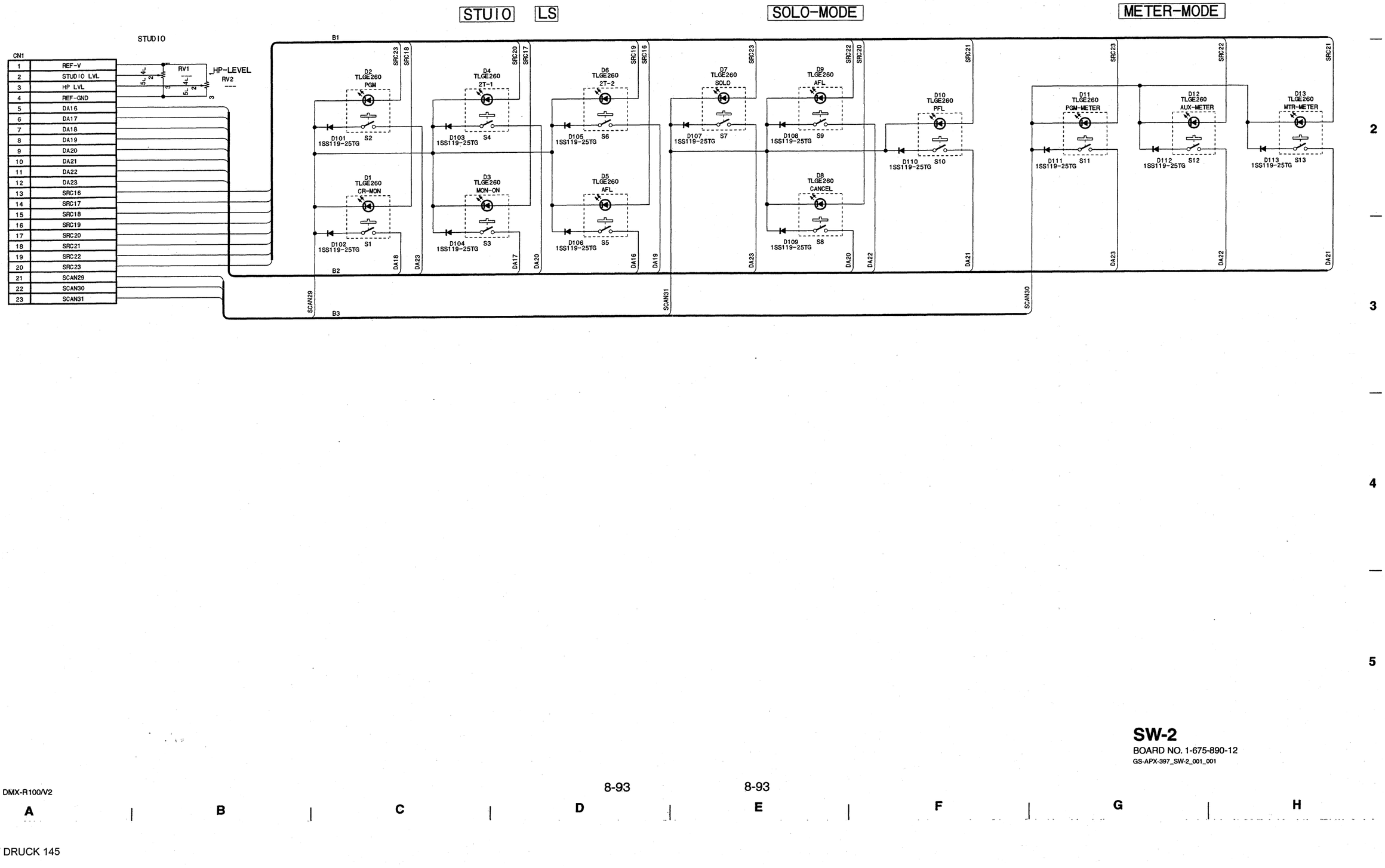

SW-2
BOARD NO. 1-675-890-12
GS-APX-397_SW-2_001_001

8-93 8-93

DMX-R100/V2

SONY-SP1439 / DRUCK 145

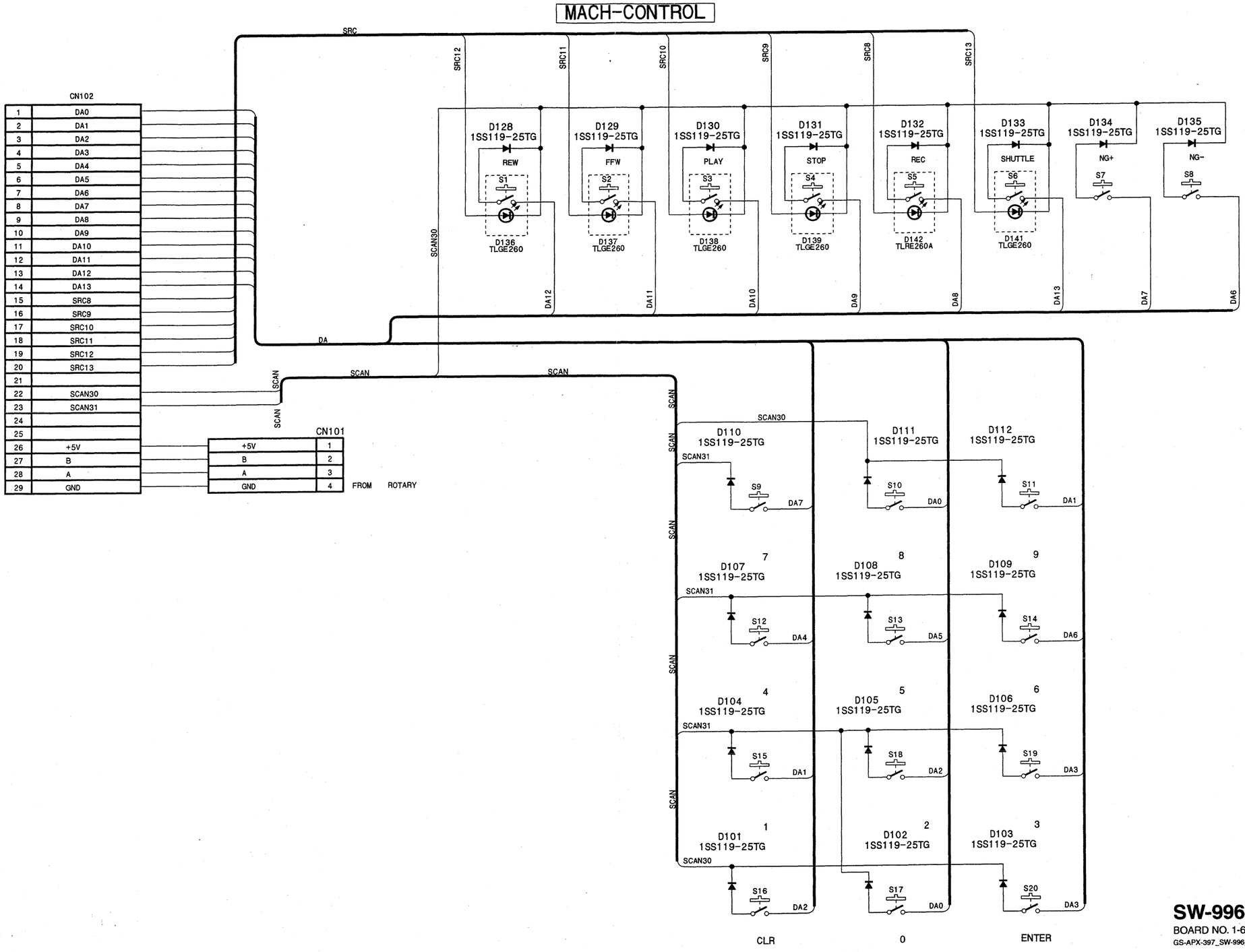

SW-996
BOARD NO. 1-675-872-12
GS-APX-397_SW-996_001_001

8-94 8-94

DMX-R100/V2

SONY-SP1439 / DRUCK 146

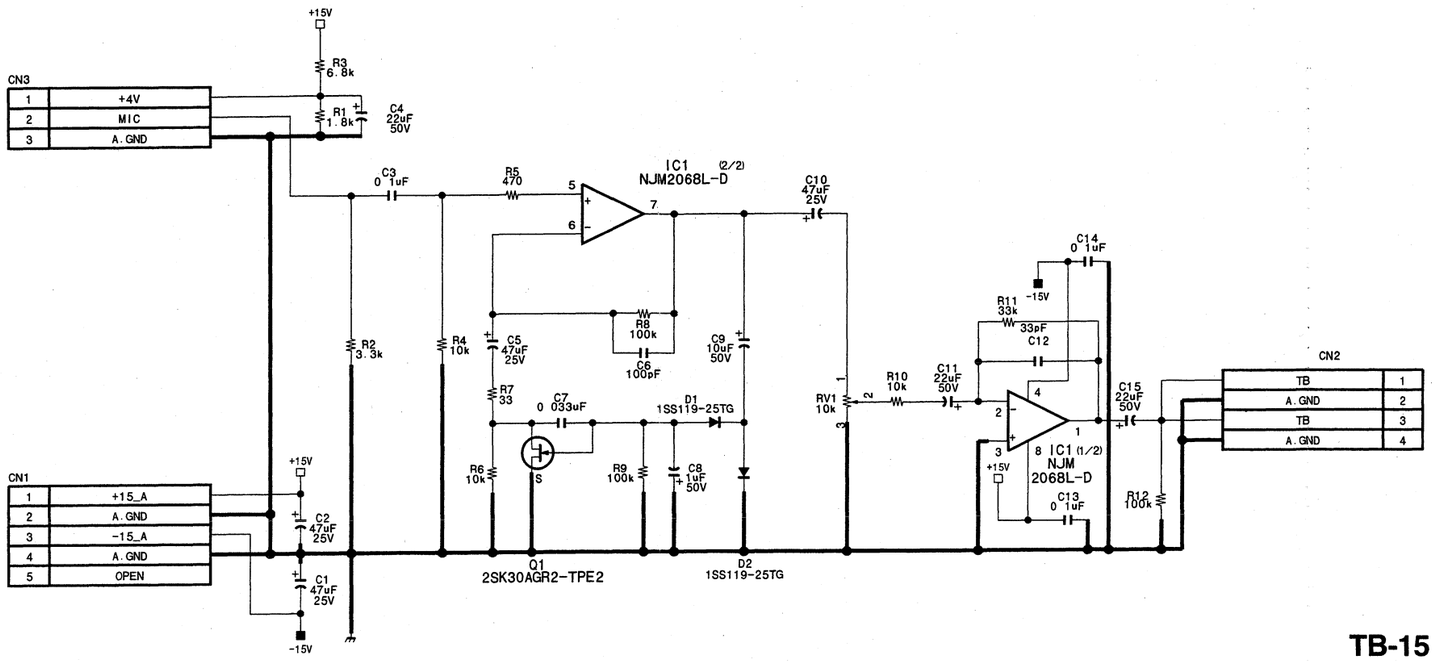

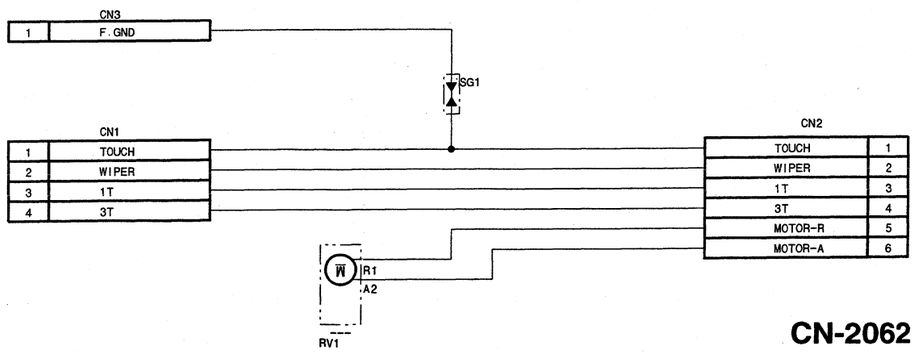

CN-2062

TB-15

BOARD NO. 1-675-871-12

GS-APX-397_TB-15_001_001

CN-2062

BOARD NO. 1-677-047-11,-12

GS-APX-397_CN-2062_001_001

VR-252 (1/8)

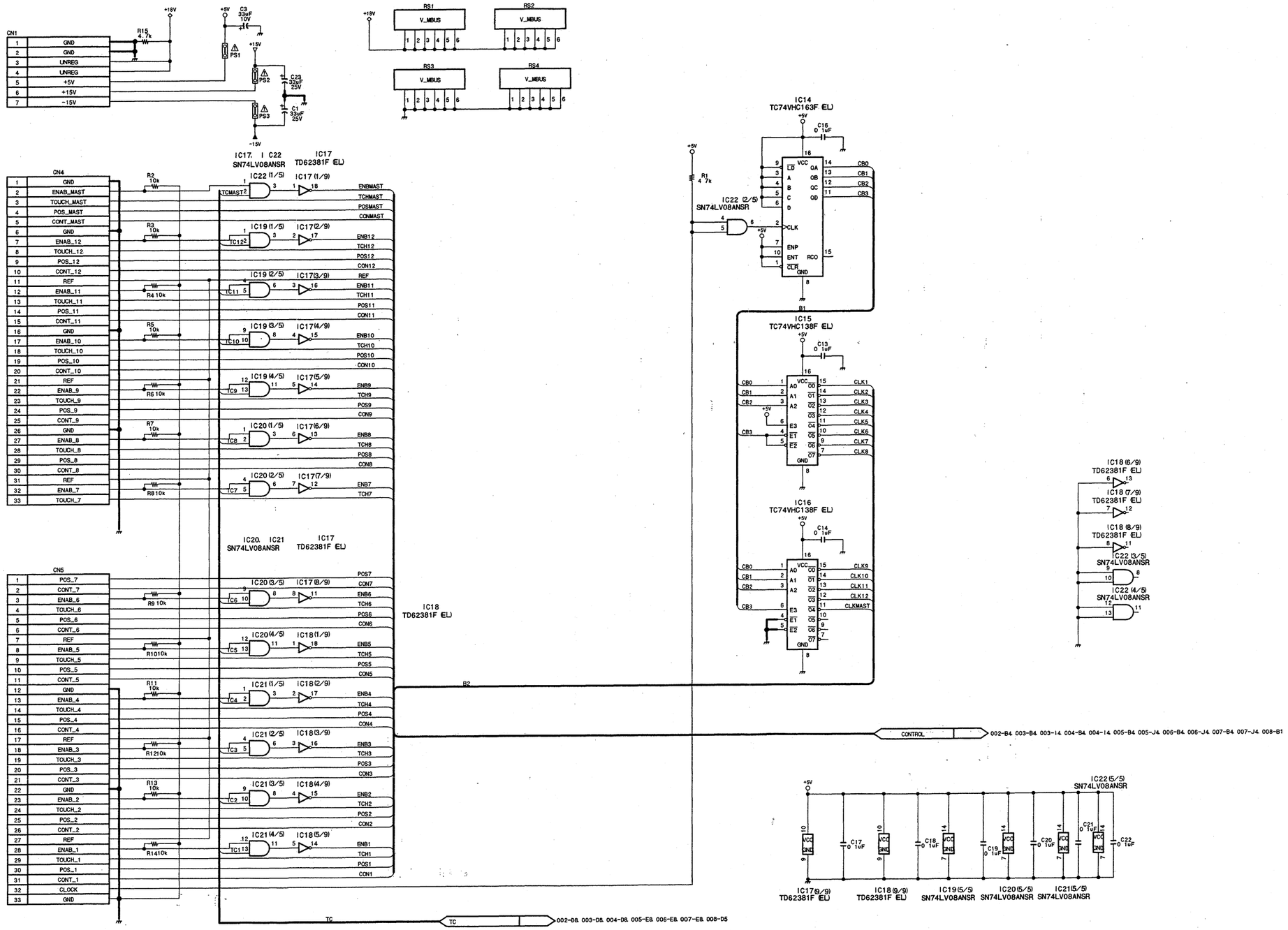

VR-252 (1/8)
BOARD NO. 1-675-865-12
GS-APX-397_VR-252_001_001

8-96 8-96

DMX-R100/V2

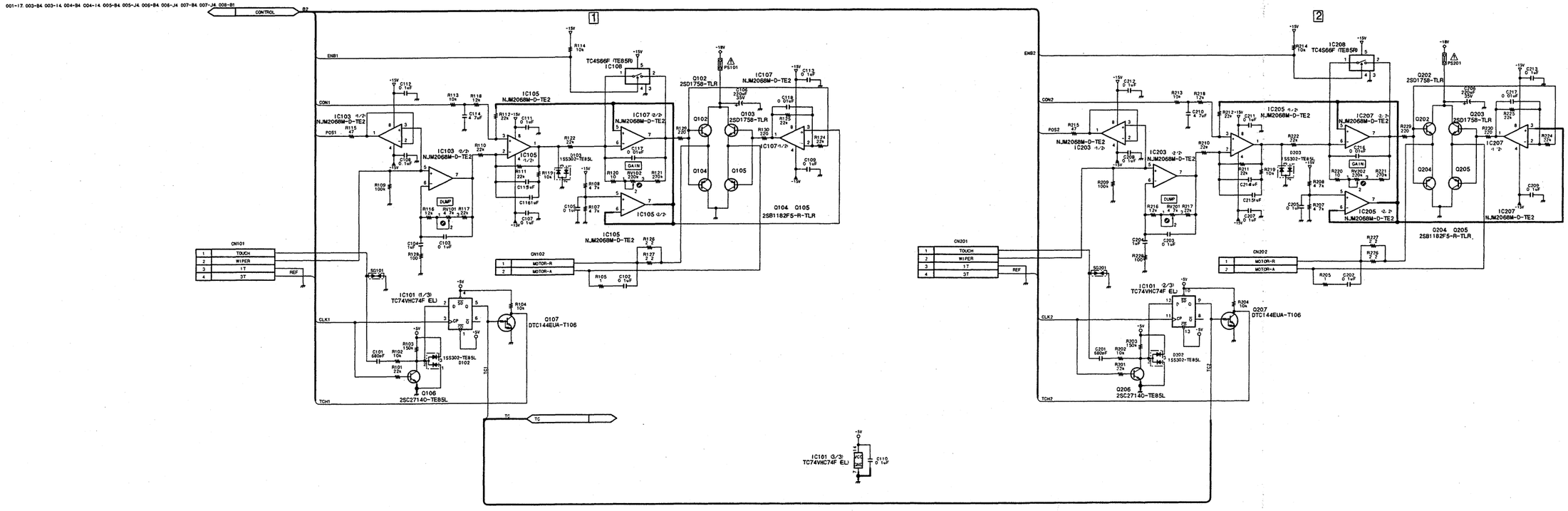
001-17, 003-B4, 003-14, 004-B4, 004-14, 005-B4, 005-J4, 006-B4, 006-J4, 007-B4, 007-J4, 008-B1
CONTROL
B2
ENB1
CON1
POS1
CLK1
TCH1
ENB2
CON2
POS2
CLK2
TCH2
TC
REF
TOUCH
WIPER
LT
3T
MOTOR-R
MOTOR-A
CN101
CN102
CN201
CN202
SG101
SG201
IC101 (1/3) TC74VHC74F (EL)
IC101 (2/3) TC74VHC74F (EL)
IC101 (3/3) TC74VHC74F (EL)
IC103 (1/2) NJM2068M-D-TE2
IC103 (2/2) NJM2068M-D-TE2
IC105 NJM2068M-D-TE2
IC105 (1/2) NJM2068M-D-TE2
IC105 (2/2) NJM2068M-D-TE2
IC107 (2/2) NJM2068M-D-TE2
IC107 (1/2) NJM2068M-D-TE2
IC203 (1/2) NJM2068M-D-TE2
IC203 (2/2) NJM2068M-D-TE2
IC205 (1/2) NJM2068M-D-TE2
IC205 (2/2) NJM2068M-D-TE2
IC207 (2/2) NJM2068M-D-TE2
IC207 (1/2) NJM2068M-D-TE2
IC106 TC4S66F (TE85R)
IC208 TC4S66F (TE85R)
Q102 2SD1758-TLR
Q103 2SD1758-TLR
Q104 Q105 2SB1182F5-R-TLR
Q107 DTC144EUA-T106
Q106 2SC2714O-TE85L
Q206 2SC2714O-TE85L
Q202 2SD1758-TLR
Q203 2SD1758-TLR
Q204 Q205 2SB1182F5-R-TLR
Q207 DTC144EUA-T106
D101 1SS302-TE85L
D102 1SS302-TE85L
D103 1SS302-TE85L
D202 1SS302-TE85L
D203 1SS302-TE85L
PS101
PS201
GAIN
DUMP
RV101 2.2k
RV102 2.2k
RV201 2.2k
RV202 2.2k

VR-252 (3/8)

3

4

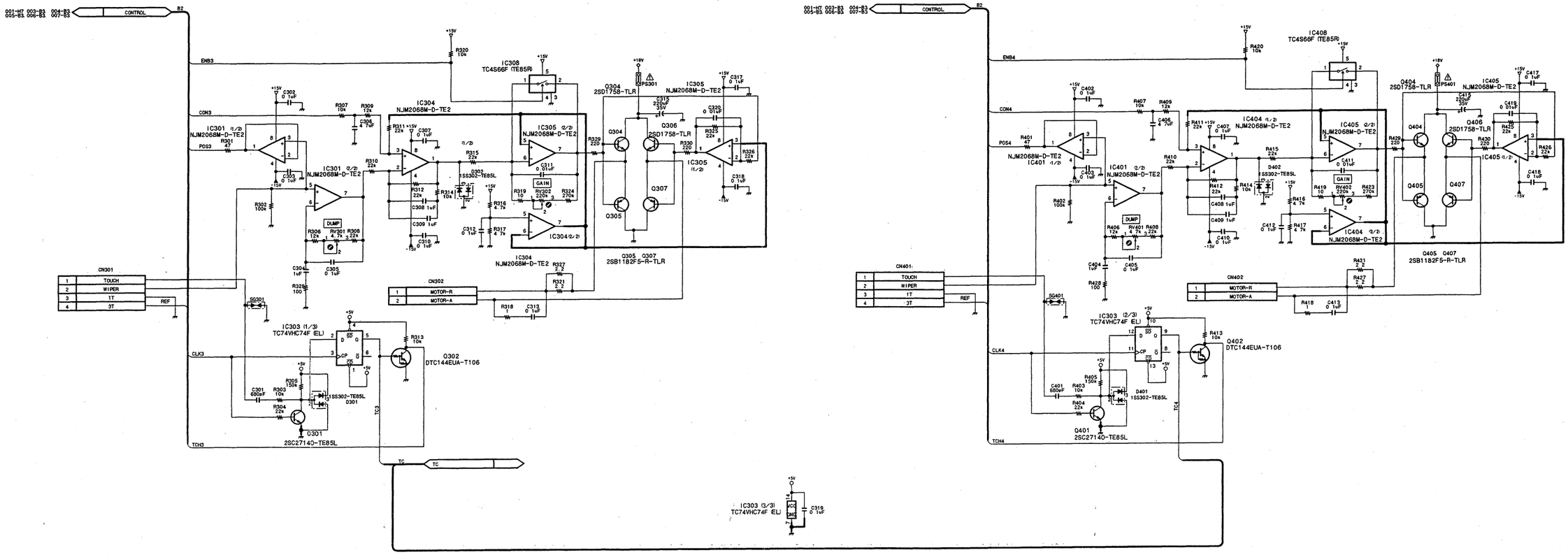
CONTROL
B2
ENB3
ENB4
CON3
CON4
IC301 (1/2) NJM2068M-D-TE2
IC301 (2/2) NJM2068M-D-TE2
IC304 NJM2068M-D-TE2
IC305 (2/2) NJM2068M-D-TE2
IC305 (1/2)
IC308 TC4S66F (TE85R)
IC401 (1/2) NJM2068M-D-TE2
IC401 (2/2) NJM2068M-D-TE2
IC404 (1/2) NJM2068M-D-TE2
IC404 (2/2) NJM2068M-D-TE2
IC405 (2/2) NJM2068M-D-TE2
IC405 (1/2)
IC408 TC4S66F (TE85R)
IC303 (1/3) TC74VHC74F (EL)
IC303 (2/3) TC74VHC74F (EL)
IC303 (3/3) TC74VHC74F (EL)
Q304 2SD1758-TLR
Q305 Q307 2SB1182F5-R-TLR
Q302 DTC144EUA-T106
Q301 2SC2714O-TE85L
Q401 2SC2714O-TE85L
Q402 DTC144EUA-T106
Q404 2SD1758-TLR
Q405 Q407 2SB1182F5-R-TLR
CN301
CN302
CN401
CN402
TOUCH
WIPER
1T
3T
REF
MOTOR-R
MOTOR-A
SG301
SG401
DUMP
GAIN
TC
TCH3
TCH4
CLK3
CLK4

VR-252 (4/8)

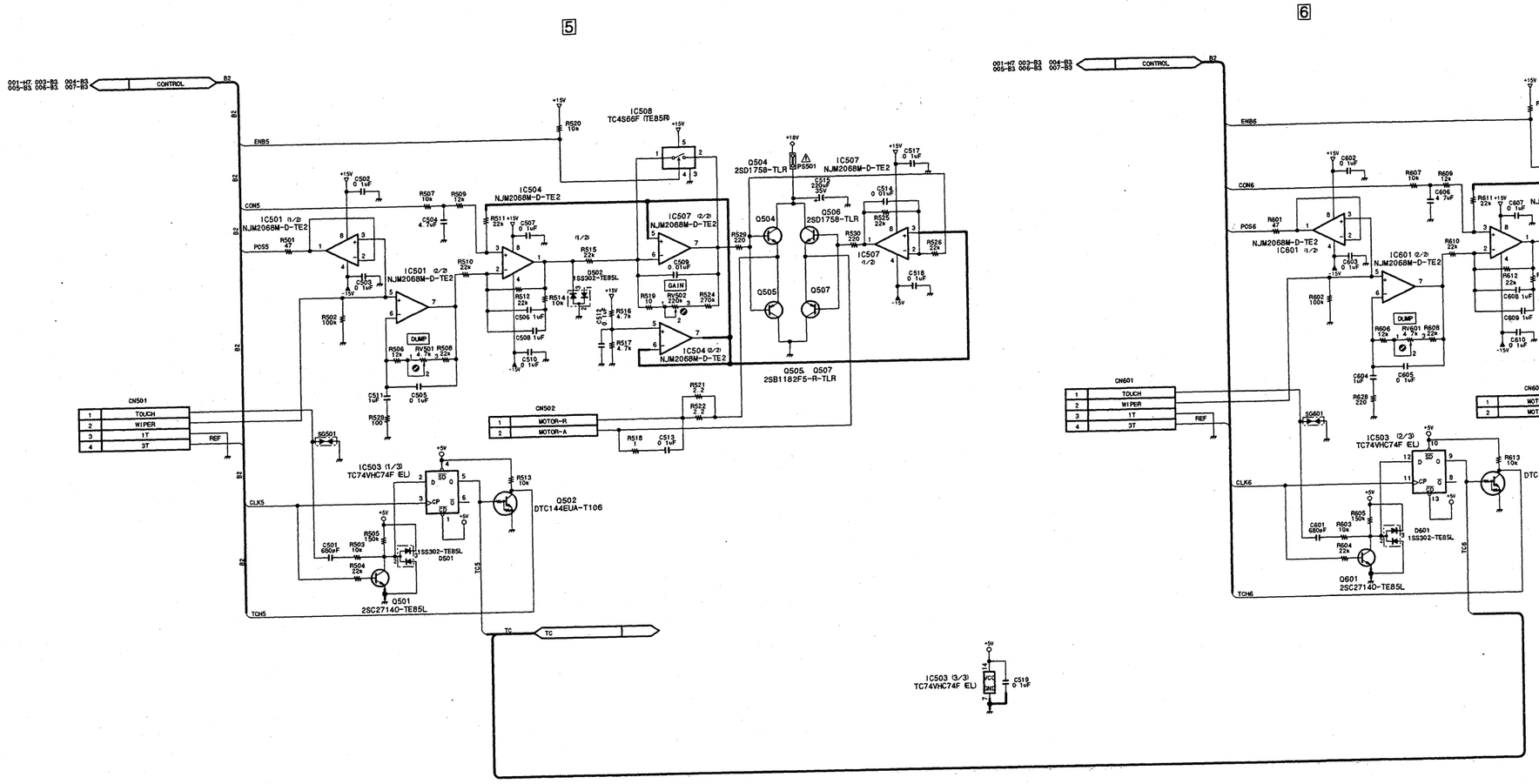
5
6
CONTROL
ENB5
ENB6
CON5
CON6
POS5
POS6
CLK5
CLK6
TCH5
TCH6
TC
IC501 (1/2) NJM2068M-D-TE2
IC501 (2/2) NJM2068M-D-TE2
IC504 NJM2068M-D-TE2
IC504 (2/2) NJM2068M-D-TE2
IC507 (2/2) NJM2068M-D-TE2
IC507 NJM2068M-D-TE2
IC507 (1/2)
IC508 TC4S66F (TE85R)
IC503 (1/3) TC74VHC74F (EL)
IC503 (2/3) TC74VHC74F (EL)
IC503 (3/3) TC74VHC74F (EL)
IC601 (1/2) NJM2068M-D-TE2
IC601 (2/2) NJM2068M-D-TE2
IC604 (1/2) NJM2068M-D-TE2
IC604 (2/2) NJM2068M-D-TE2
IC607 (2/2) NJM2068M-D-TE2
IC607 NJM2068M-D-TE2
IC607 (1/2)
Q501 2SC27140-TE85L
Q502 DTC144EUA-T106
Q504 2SD1758-TLR
Q505 Q507 2SB1182F5-R-TLR
Q506 2SD1758-TLR
Q601 2SC27140-TE85L
Q602 DTC144EUA-T106
Q604 2SD1758-TLR
Q605 Q607 2SB1182F5-R-TLR
Q606 2SD1758-TLR
D501 1SS302-TE85L
D502 1SS302-TE85L
D601 1SS302-TE85L
D602 1SS302-TE85L
CN501
CN502
CN601
CN602
TOUCH
WIPER
1T
3T
REF
MOTOR-R
MOTOR-A
DUMP
GAIN

VR-252 (5/8)

7

8

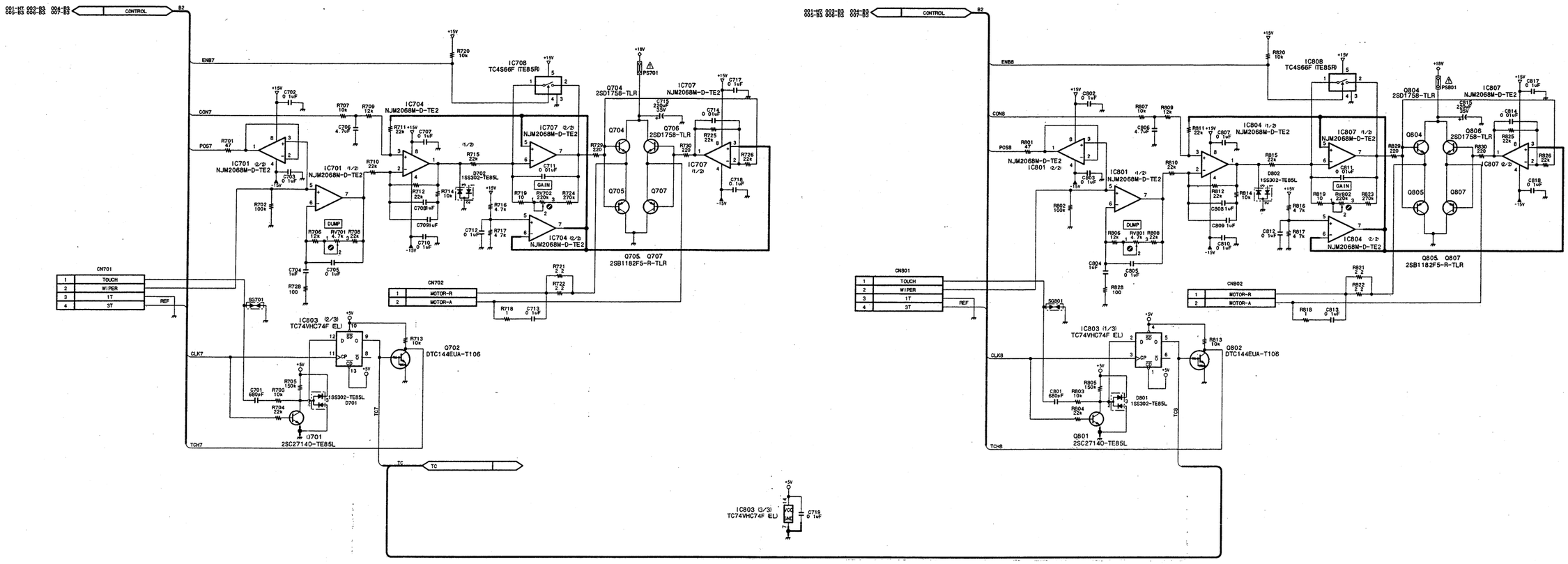
CONTROL
ENB7
CON7
POS7
CLK7
TCH7
IC701 (2/2) NJM2068M-D-TE2
IC701 (1/2) NJM2068M-D-TE2
IC704 NJM2068M-D-TE2
IC704 (2/2) NJM2068M-D-TE2
IC707 (2/2) NJM2068M-D-TE2
IC707 (1/2)
IC708 TC4S66F (TE85R)
IC803 (2/3) TC74VHC74F (EL)
IC803 (3/3) TC74VHC74F (EL)
Q701 2SC2714O-TE85L
Q702 DTC144EUA-T106
Q704 2SD1758-TLR
Q705 Q707 2SB1182F5-R-TLR
Q706 2SD1758-TLR
CN701
CN702
TOUCH
WIPER
1T
3T
REF
MOTOR-R
MOTOR-A
DUMP
GAIN
TC

CONTROL
ENB8
CON8
POS8
CLK8
TCH8
IC801 (1/2) NJM2068M-D-TE2
IC801 (2/2) NJM2068M-D-TE2
IC804 (1/2) NJM2068M-D-TE2
IC804 (2/2) NJM2068M-D-TE2
IC807 (1/2) NJM2068M-D-TE2
IC807 (2/2) NJM2068M-D-TE2
IC808 TC4S66F (TE85R)
IC803 (1/3) TC74VHC74F (EL)
Q801 2SC2714O-TE85L
Q802 DTC144EUA-T106
Q804 2SD1758-TLR
Q805 Q807 2SB1182F5-R-TLR
Q806 2SD1758-TLR
CN801
CN802
TOUCH
WIPER
1T
3T
REF
MOTOR-R
MOTOR-A
DUMP
GAIN

VR-252 (6/8)

9

10

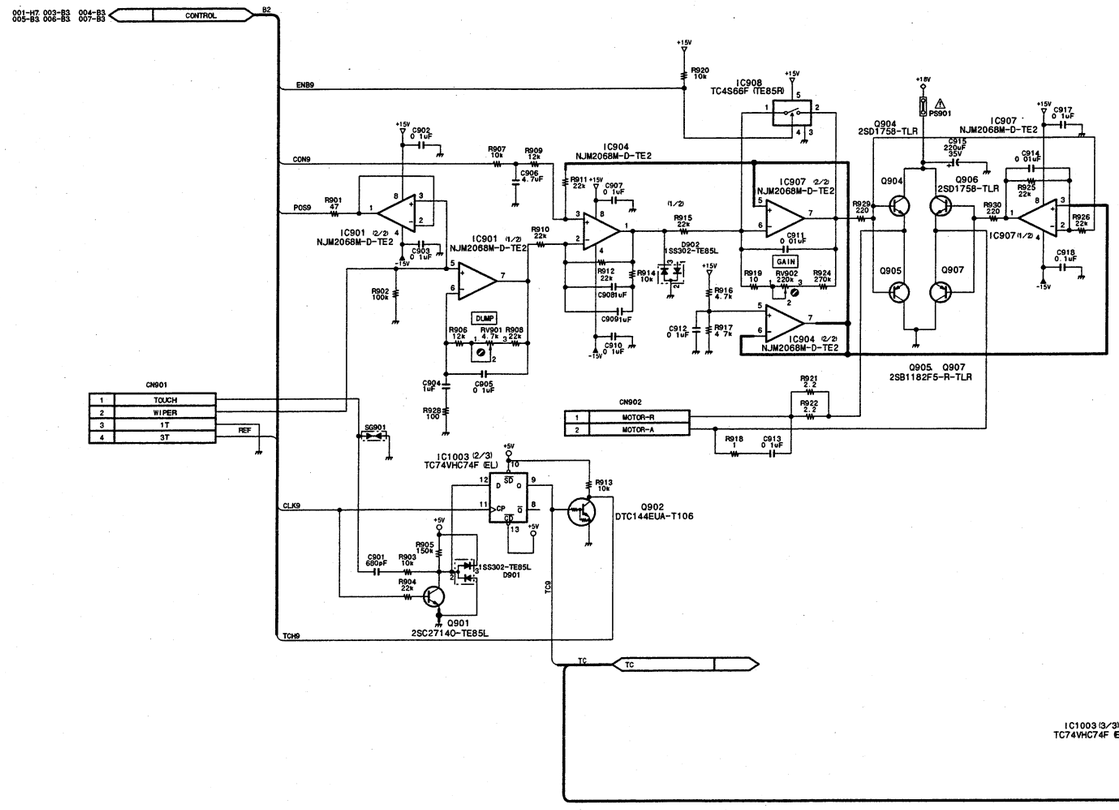

VR-252 (6/8)

BOARD NO. 1-675-865-12

GS-APX-397_VR-252_001_006

VR-252 (7/8)

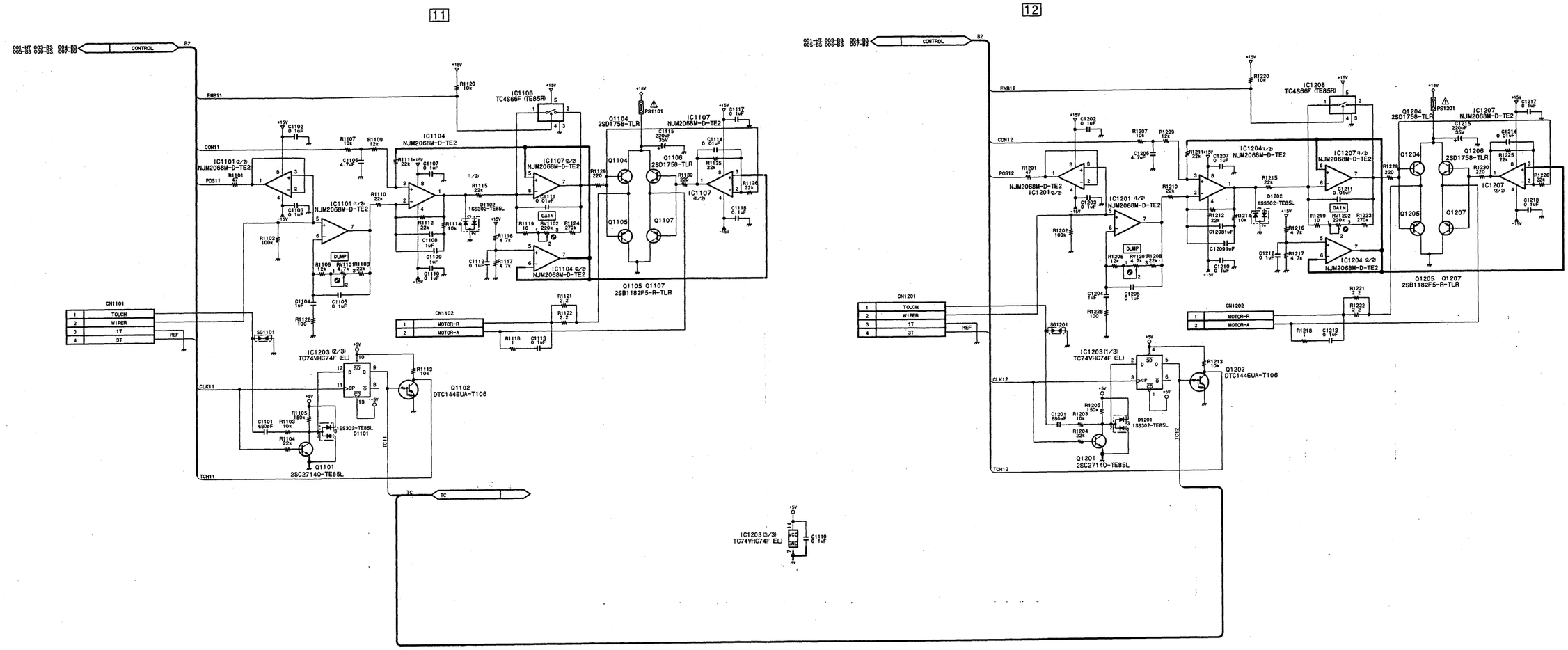
11
12
CONTROL
ENB11
ENB12
CON11
CON12
POS11
POS12
IC1101 (2/2) NJM2068M-D-TE2
IC1101 (1/2) NJM2068M-D-TE2
IC1104 NJM2068M-D-TE2
IC1107 (2/2) NJM2068M-D-TE2
IC1107 (1/2) NJM2068M-D-TE2
IC1108 TC4S66F (TE85R)
IC1201 (2/2) NJM2068M-D-TE2
IC1201 (1/2) NJM2068M-D-TE2
IC1204 (1/2) NJM2068M-D-TE2
IC1207 (1/2) NJM2068M-D-TE2
IC1204 (2/2) NJM2068M-D-TE2
IC1207 (2/2) NJM2068M-D-TE2
Q1104 2SD1758-TLR
Q1106 2SD1758-TLR
Q1204 2SD1758-TLR
Q1206 2SD1758-TLR
Q1105 Q1107 2SB1182F5-R-TLR
Q1205 Q1207 2SB1182F5-R-TLR
Q1101 2SC27140-TE85L
Q1102 DTC144EUA-T106
Q1201 2SC27140-TE85L
Q1202 DTC144EUA-T106
D1101 1SS302-TE85L
D1102 1SS302-TE85L
D1201 1SS302-TE85L
D1202 1SS302-TE85L
PS1101
PS1201
CN1101
CN1102
CN1201
CN1202
TOUCH
WIPER
1T
3T
REF
MOTOR-R
MOTOR-A
DUMP
GAIN
IC1203 (2/3) TC74VHC74F (EL)
IC1203 (1/3) TC74VHC74F (EL)
IC1203 (3/3) TC74VHC74F (EL)
CLK11
CLK12
TCH11
TCH12
TC11
TC12
TC

VR-252 (8/8)

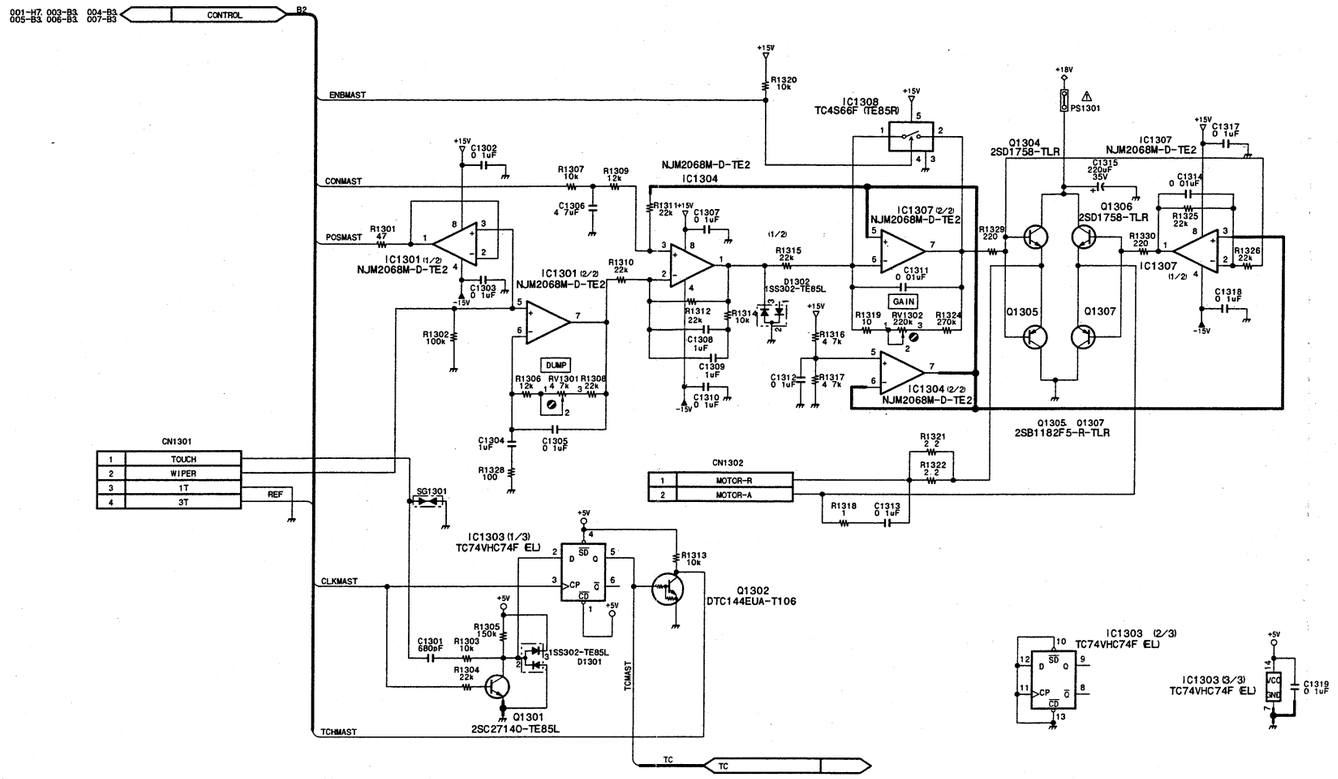

VR-252 (8/8)
BOARD NO. 1-675-865-12
GS-APX-397_VR-252_001_008

8-2. DMBK-R101 (ADC-39 board)

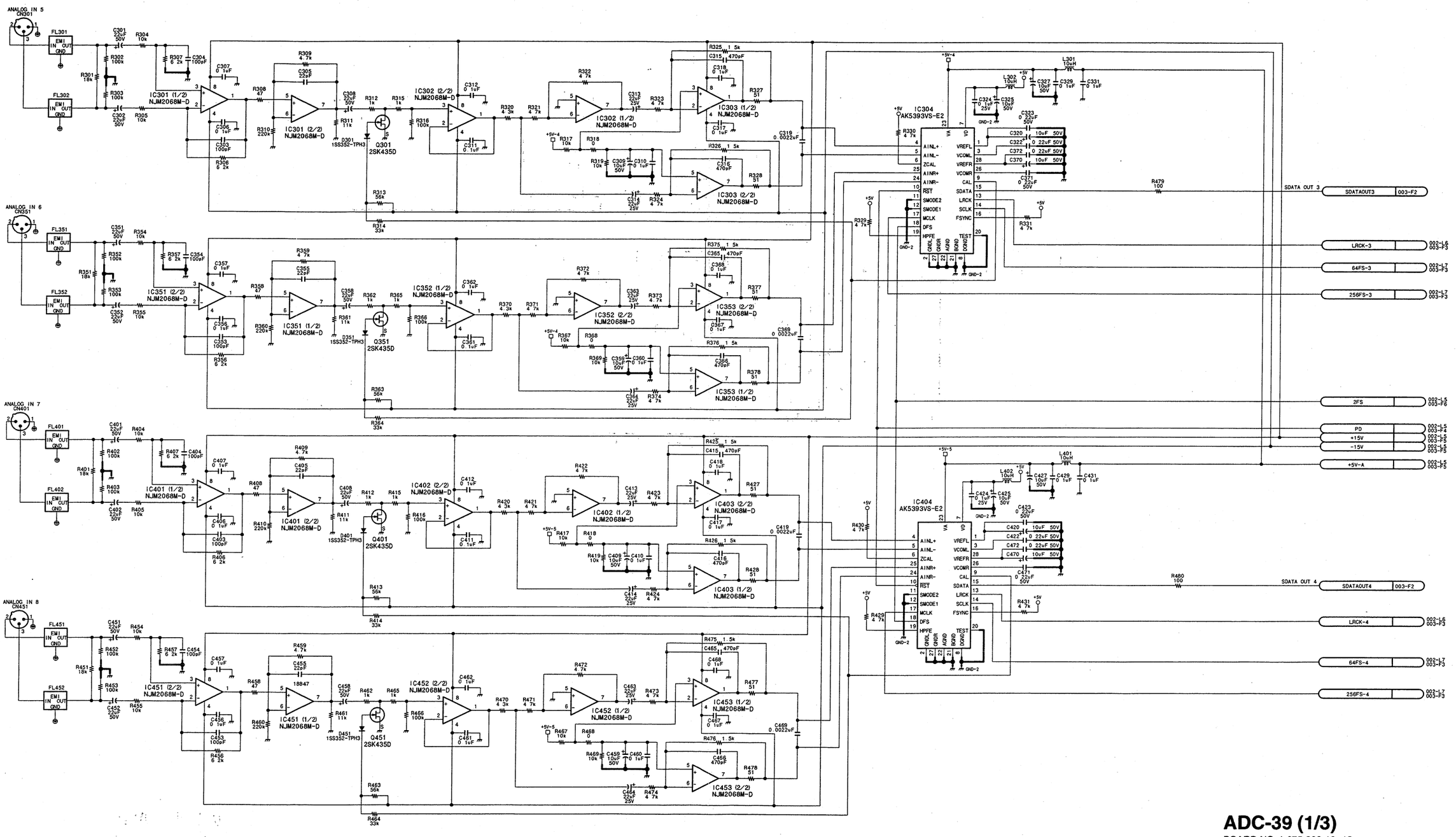

ADC-39 (1/3)
BOARD NO. 1-675-892-12,-13
GS-APX-397_ADC-39_002_001

ADC-39 (2/3)

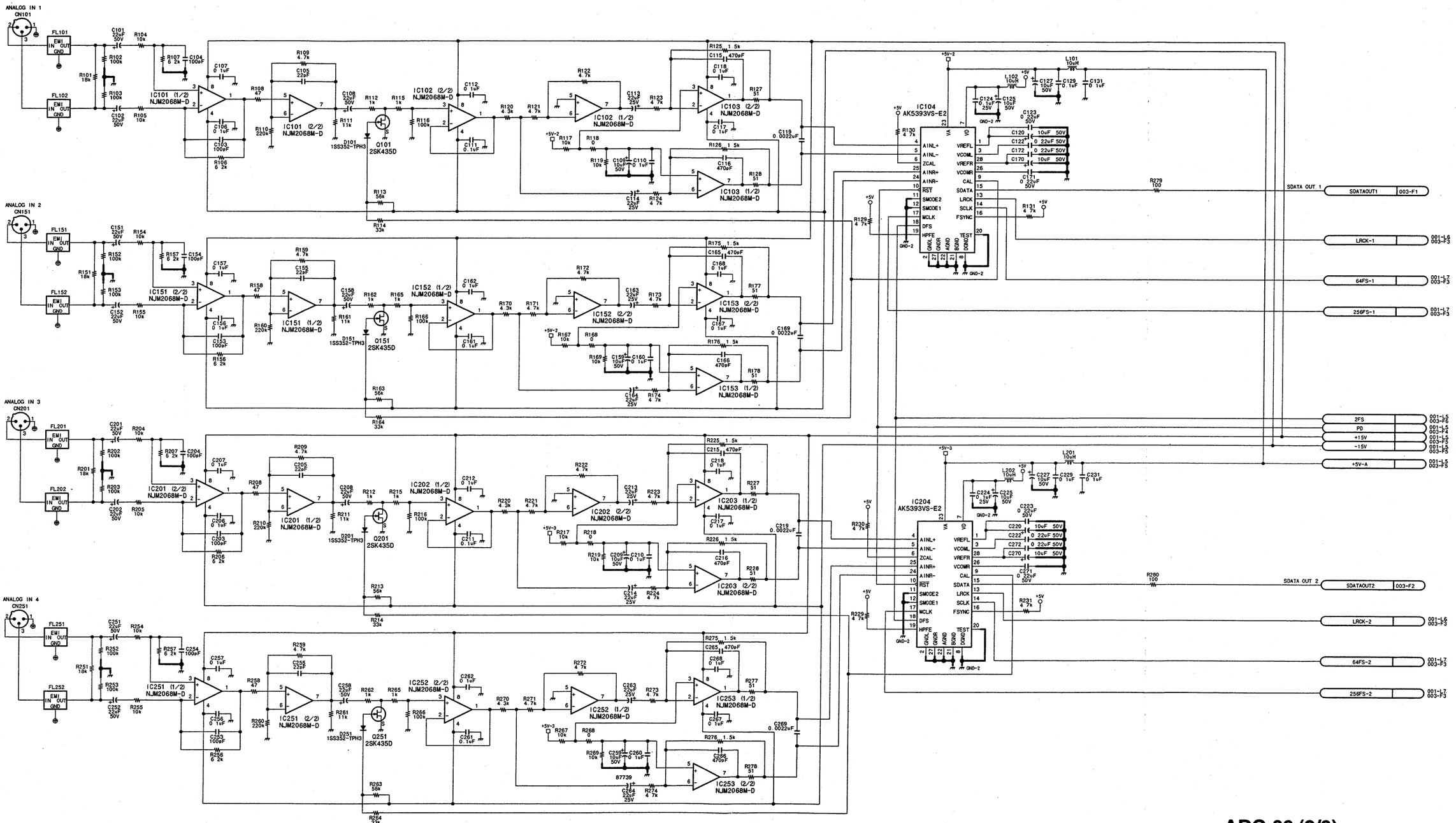

ADC-39 (2/3)

BOARD NO. 1-675-892-12,-13

GS-APX-397_ADC-39_002_002

ADC-39 (3/3)

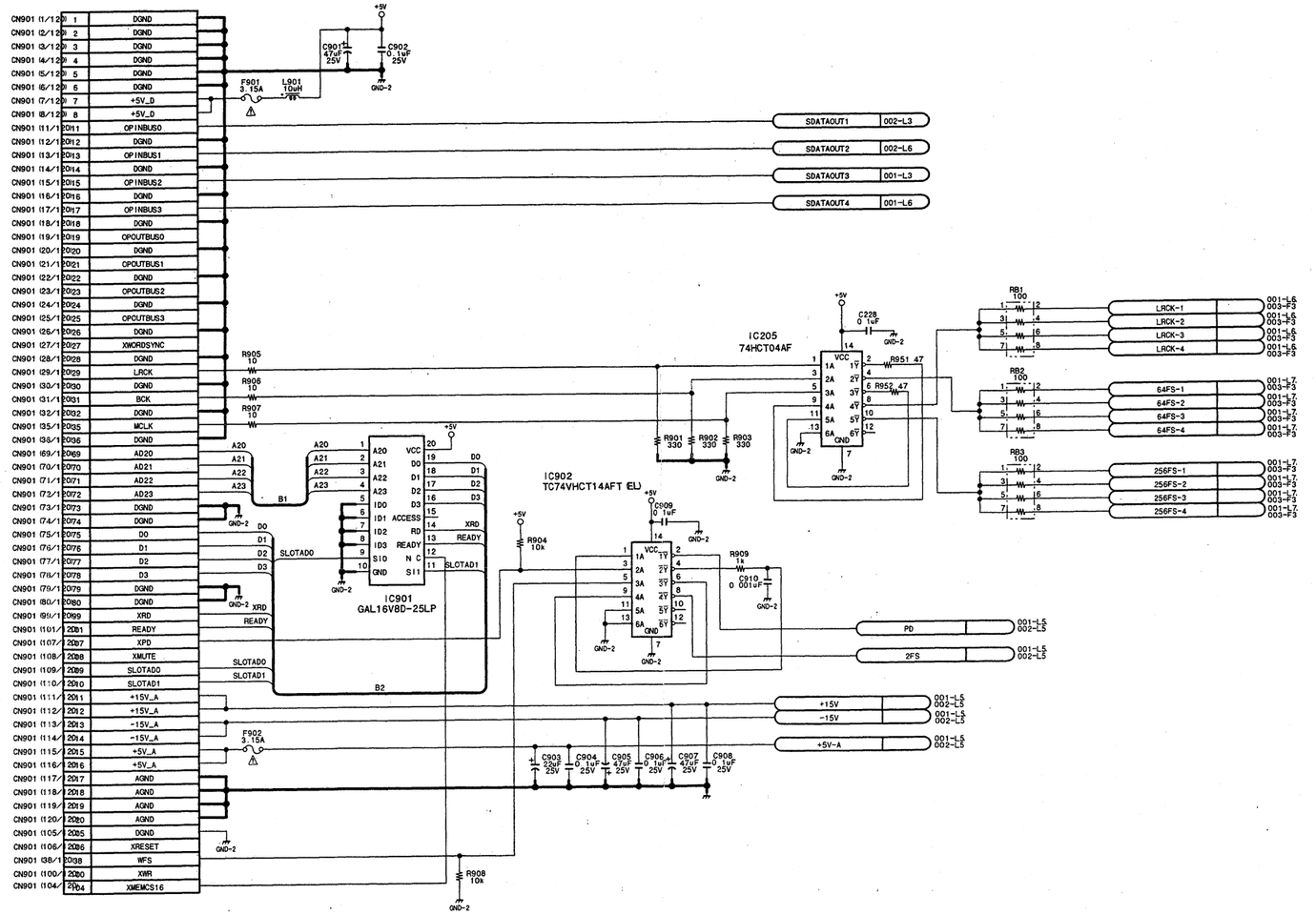

8-106

ADC-39 (3/3)
BOARD NO. 1-675-892-12,-13
GS-APX-397_ADC-39_002_003

DAC-36 (1/3)

8-3. DMBK-R102 (DAC-36 board)

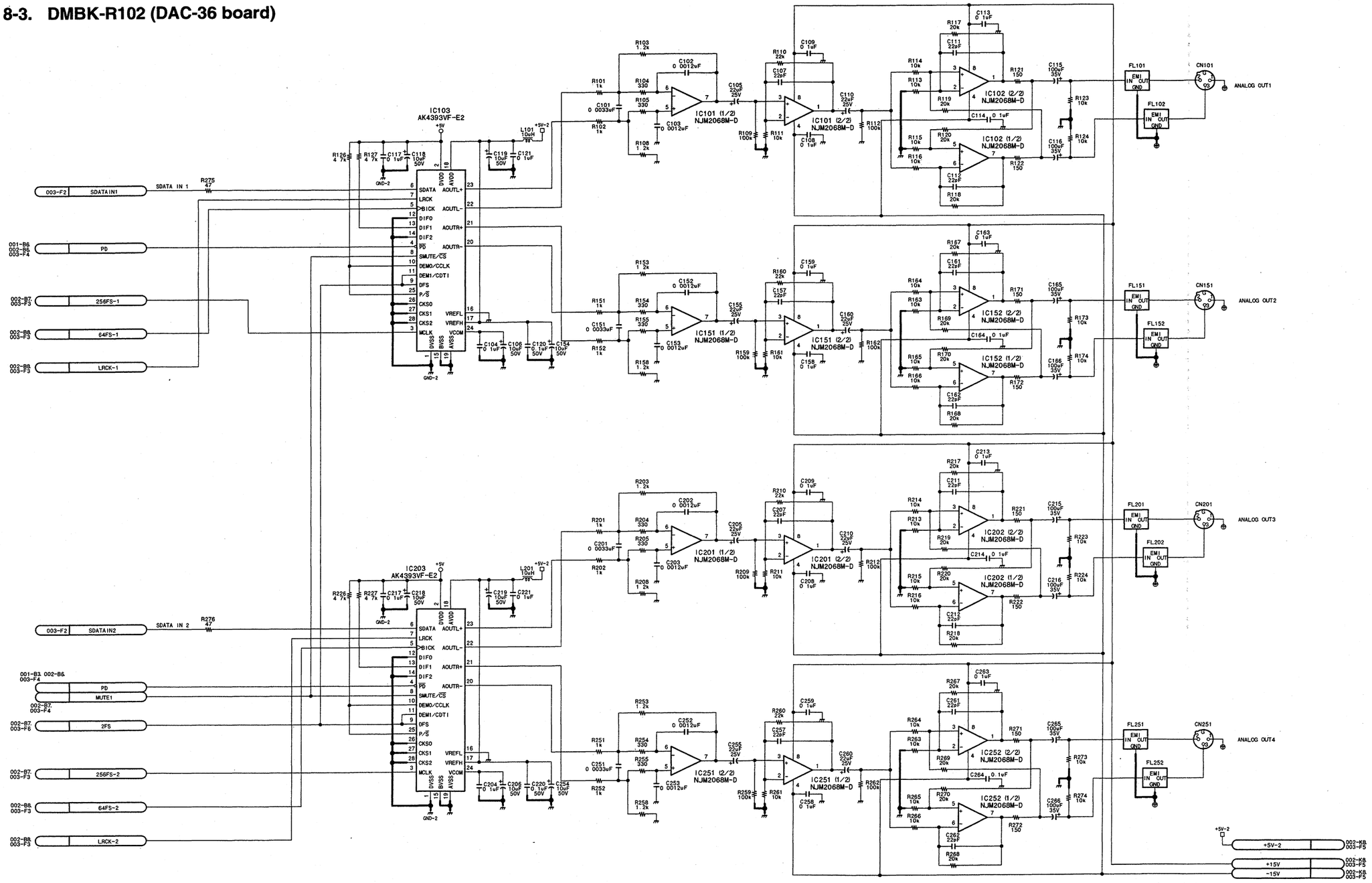

DAC-36 (1/3)
BOARD NO. 1-675-893-13
GS-APX-397_DAC-36_002_001

DAC-36 (2/3)

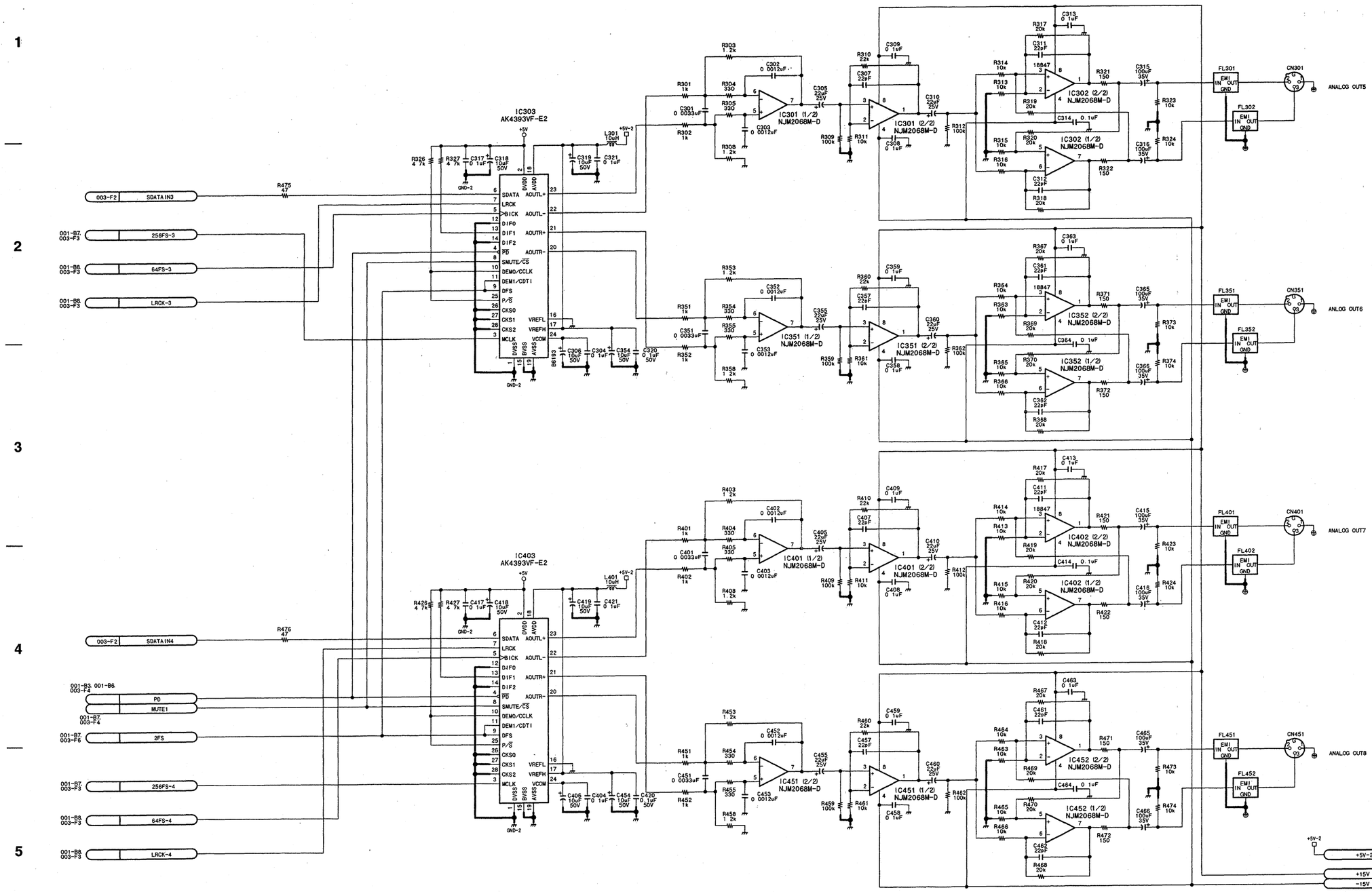

DAC-36 (2/3)
BOARD NO. 1-675-893-13
GS-APX-397_DAC-36_002_002

8-108 8-108

DMX-R100/V2

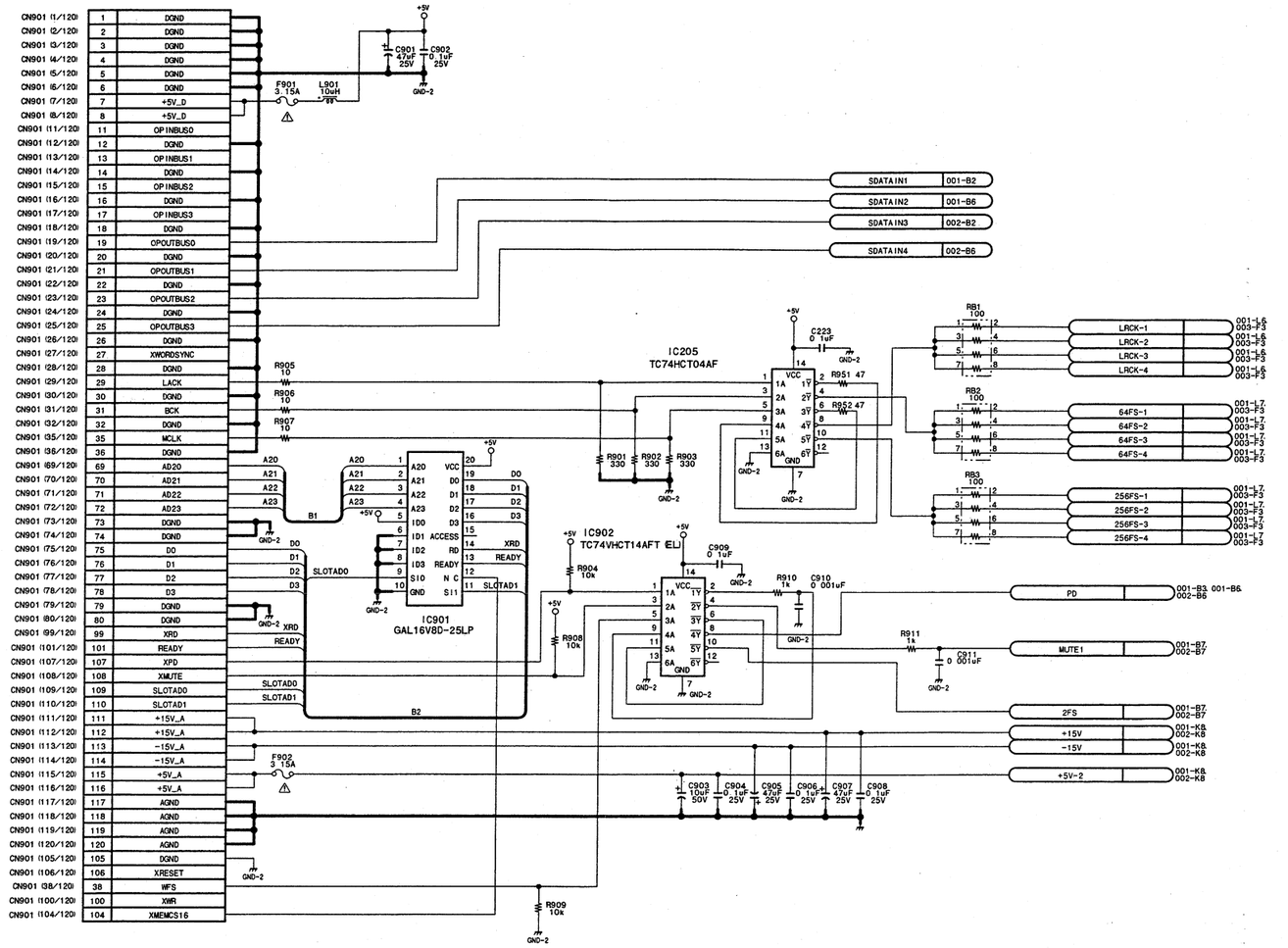

DAC-36 (3/3)
BOARD NO. 1-675-893-13
GS-APX-397_DAC-36_002_003

8-4. DMBK-R103 (DIO-51 board)

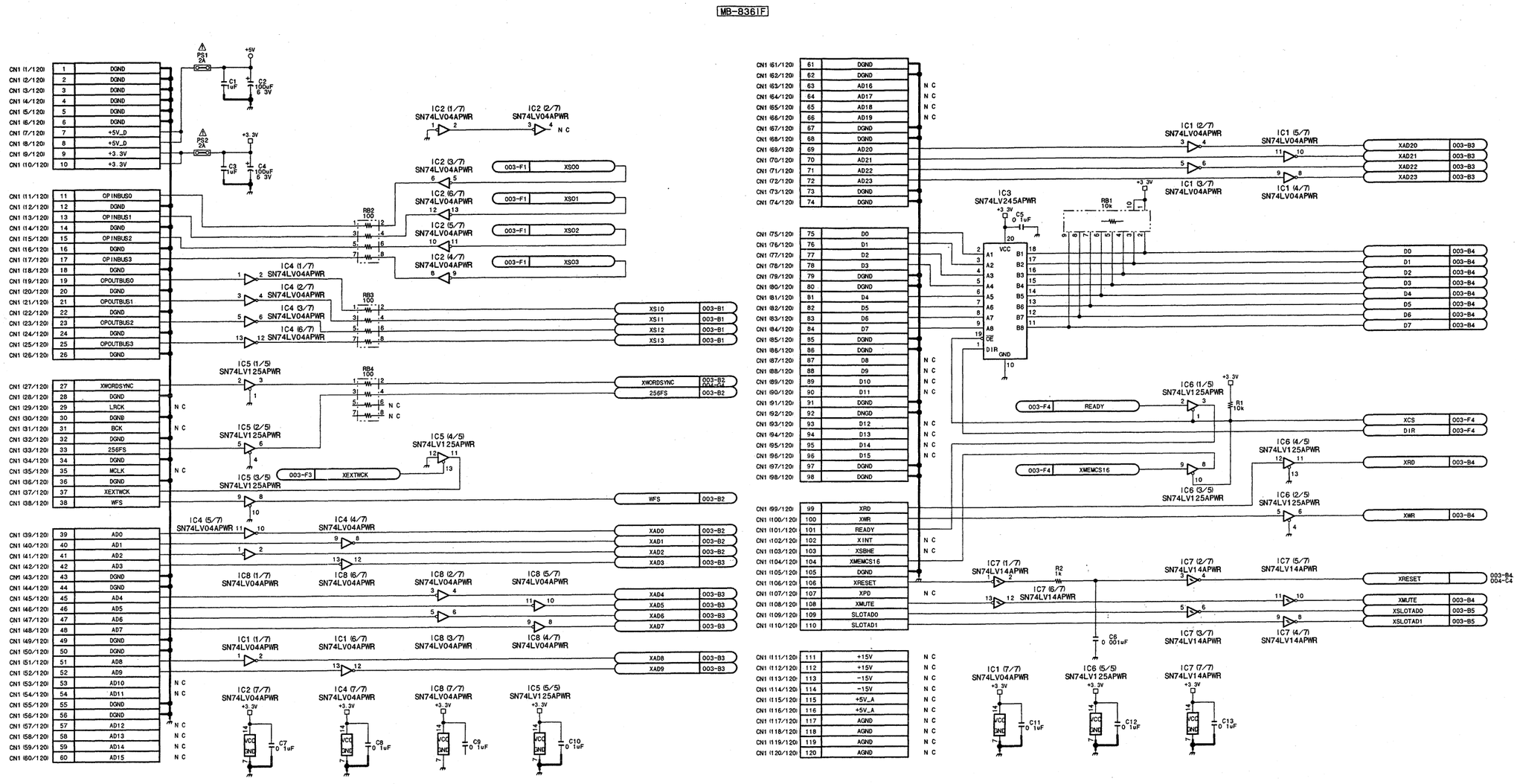

DIO-51 (1/4)
BOARD NO. 1-675-894-12
GS-APX-397_DIO-51_002_001

DIO-51 (2/4)

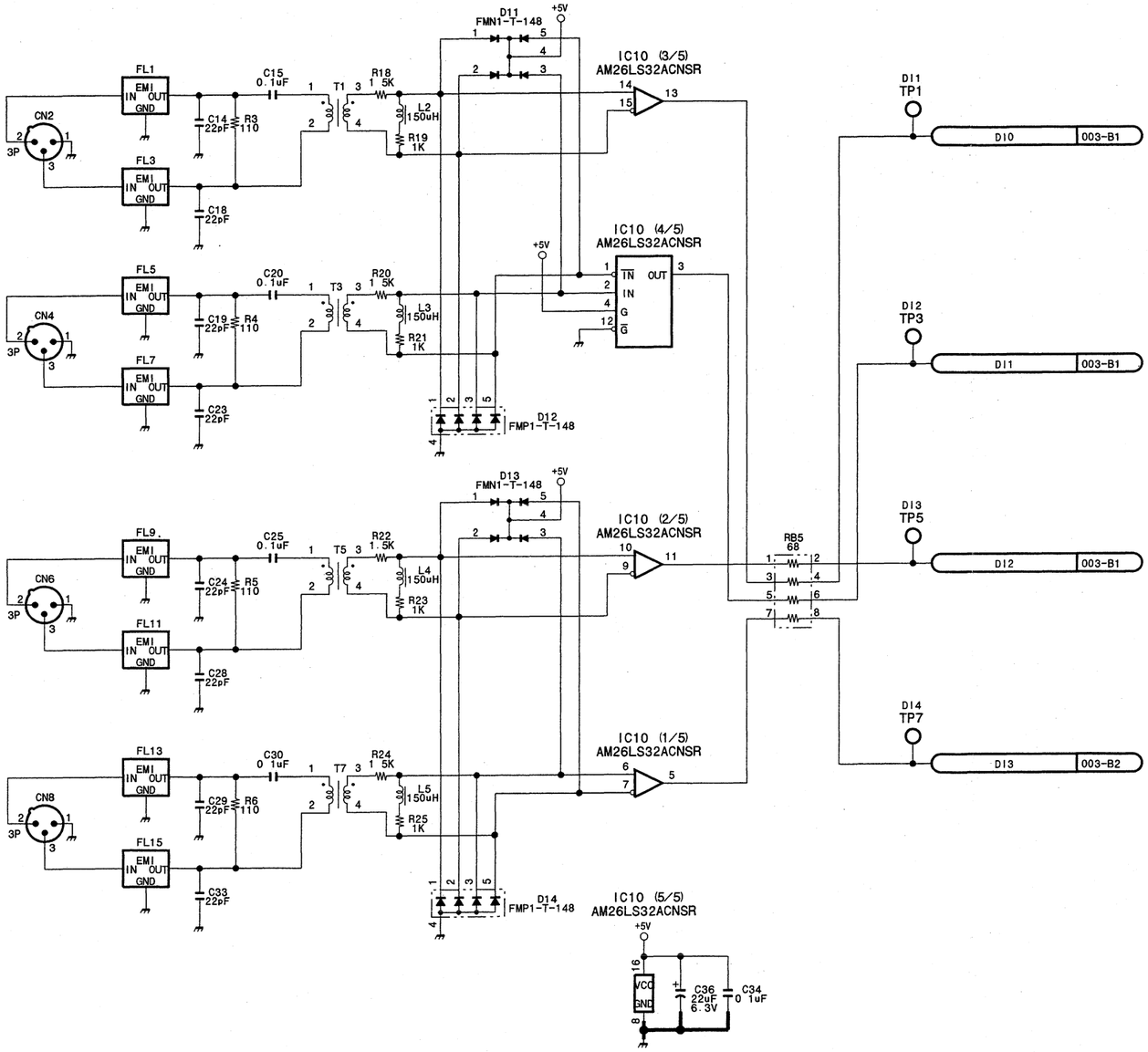

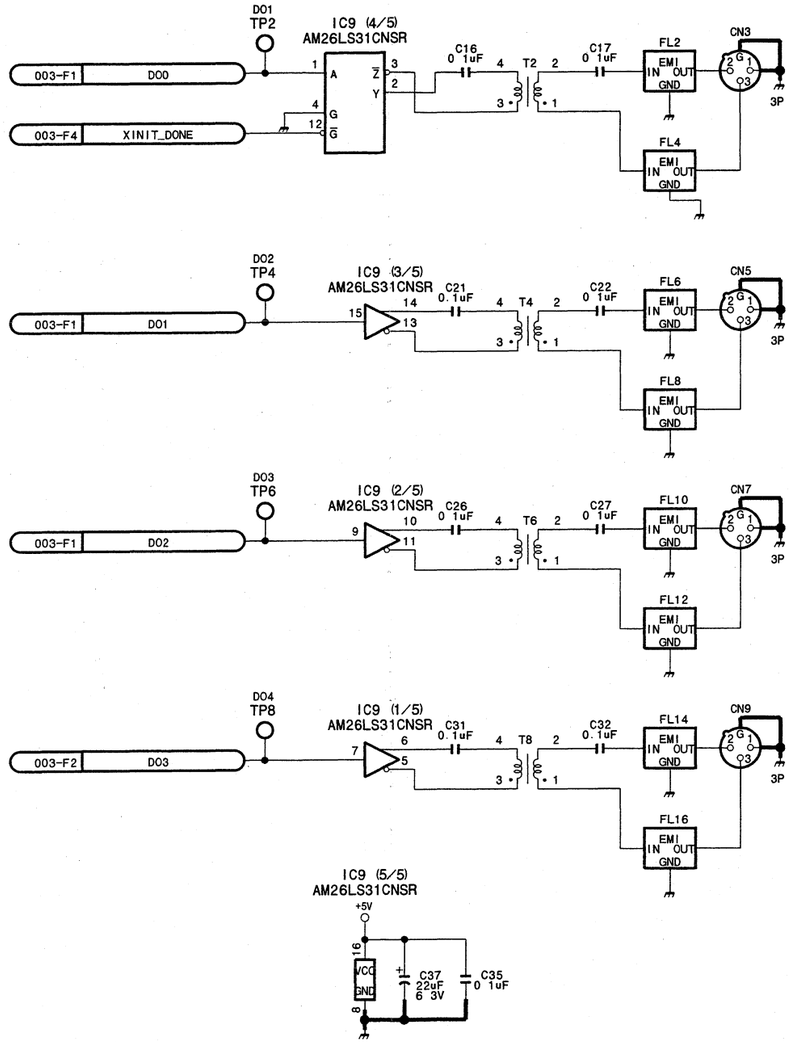

DIO-51 (2/4)
BOARD NO. 1-675-894-12
GS-APX-397_DIO-51_002_002

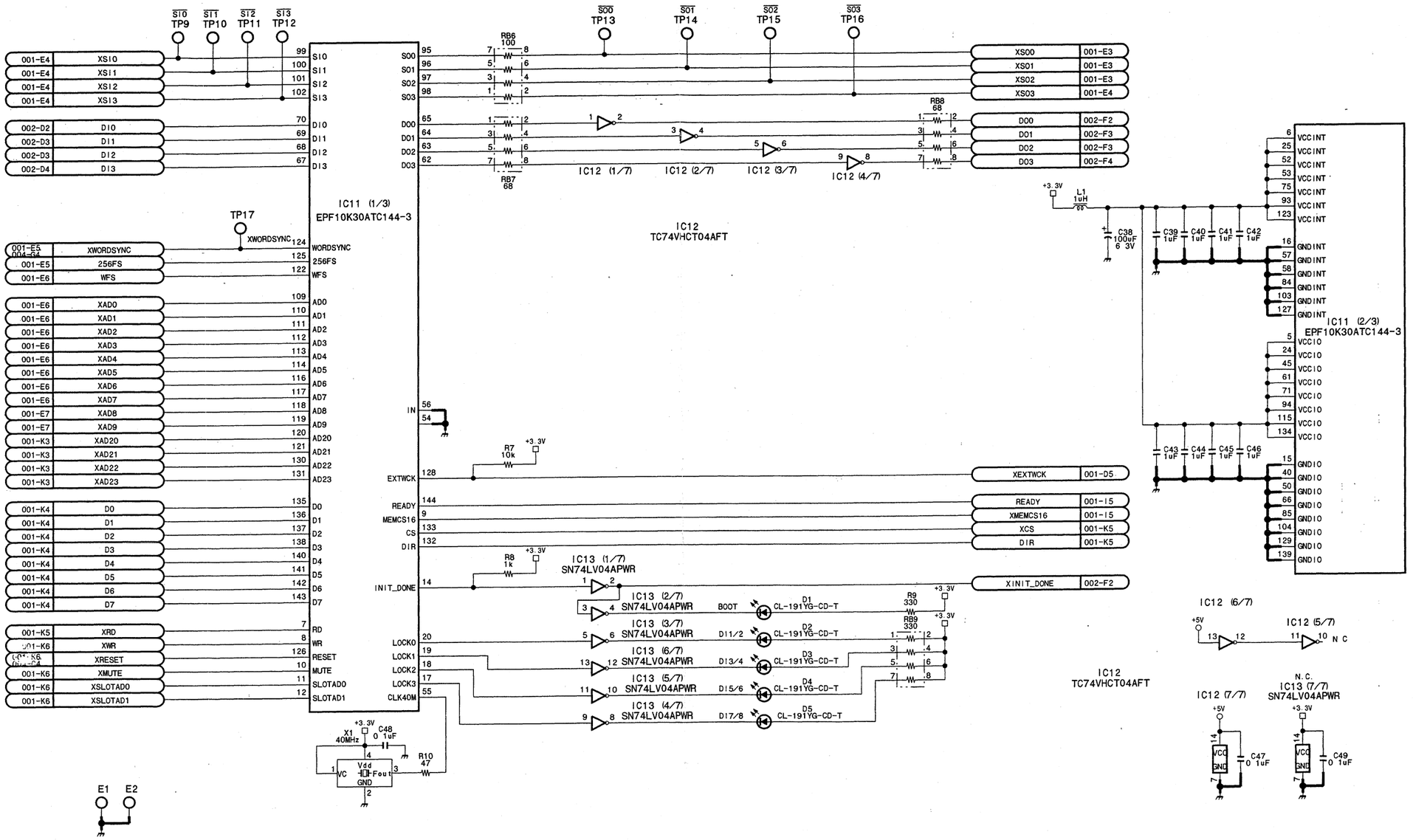

DIO-51 (3/4)
BOARD NO. 1-675-894-12
GS-APX-397_DIO-51_002_003

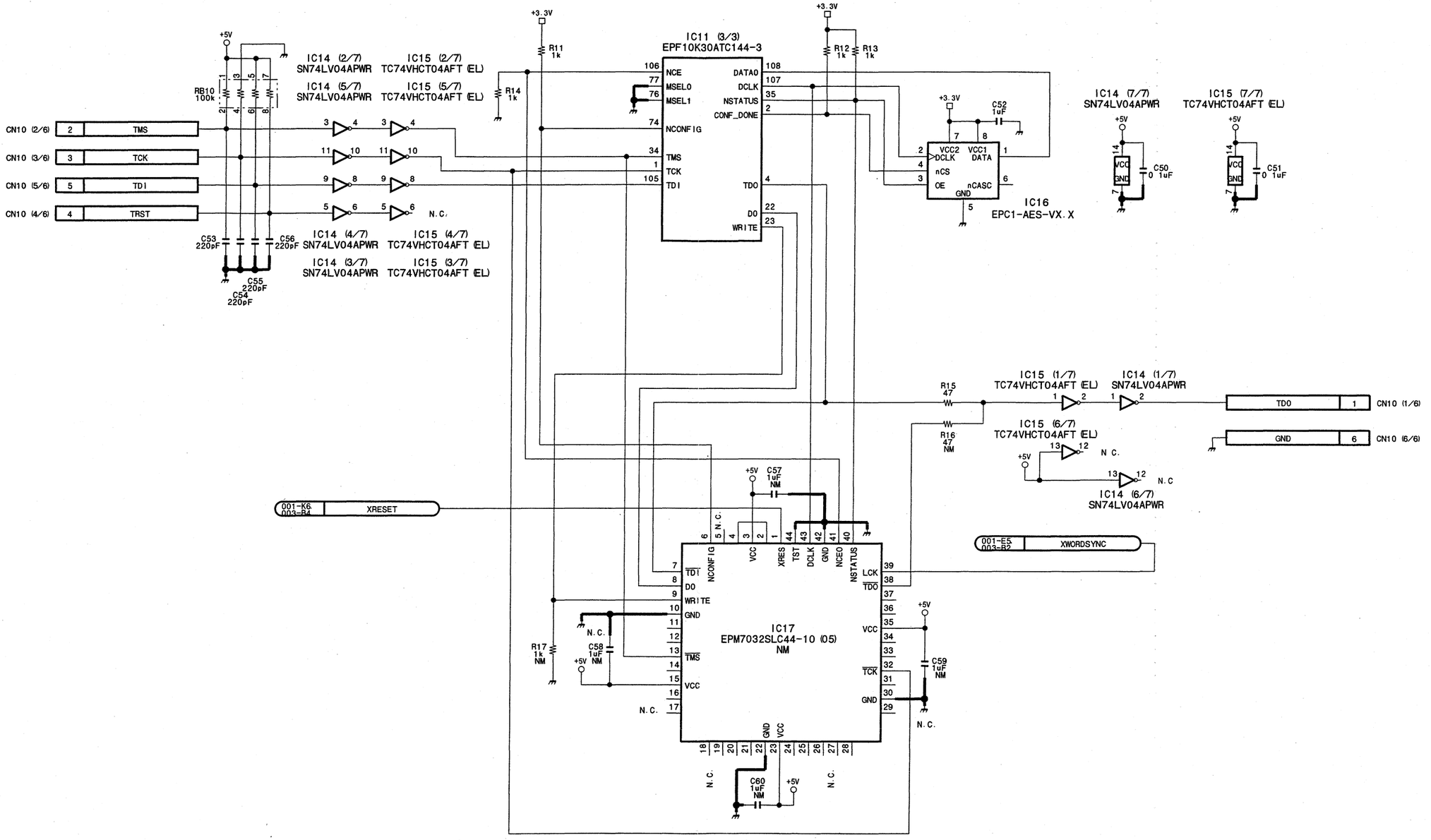

DIO-51 (4/4)
BOARD NO. 1-675-894-12
GS-APX-397_DIO-51_002_004

8-5. DMBK-R104 (DI-35 board)

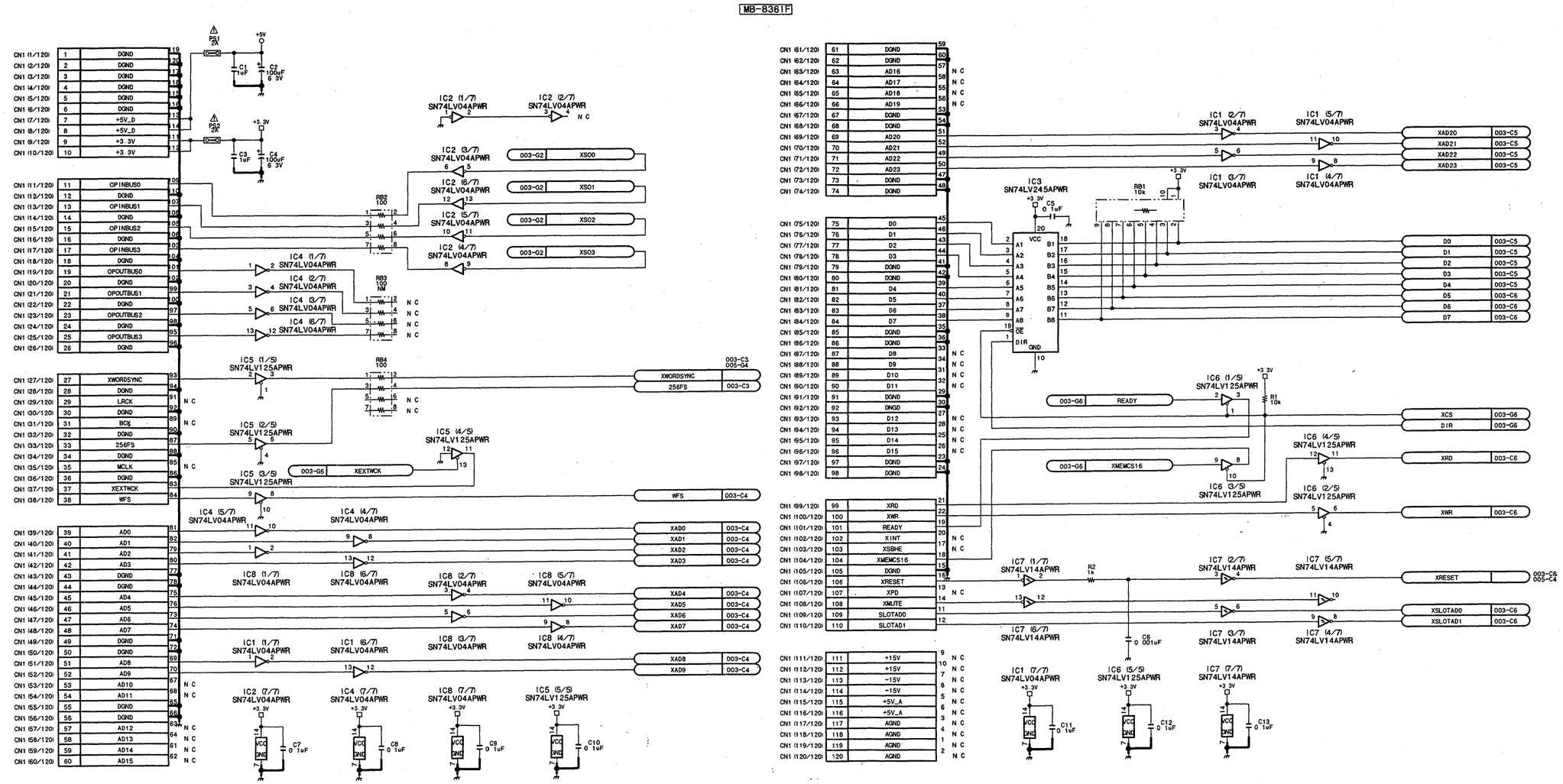

DI-35 (1/5)
BOARD NO. 1-675-895-12
GS-APX-397_DI-35_003_001

DI-35 (2/5)

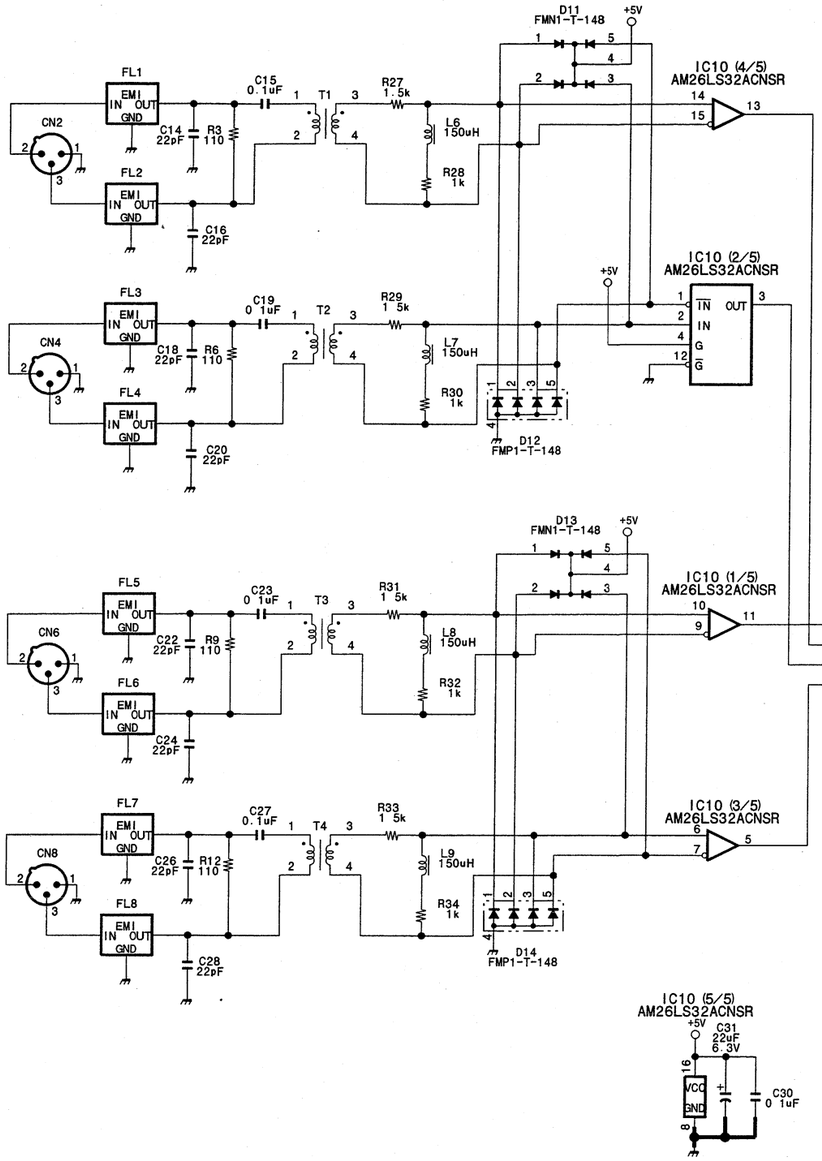

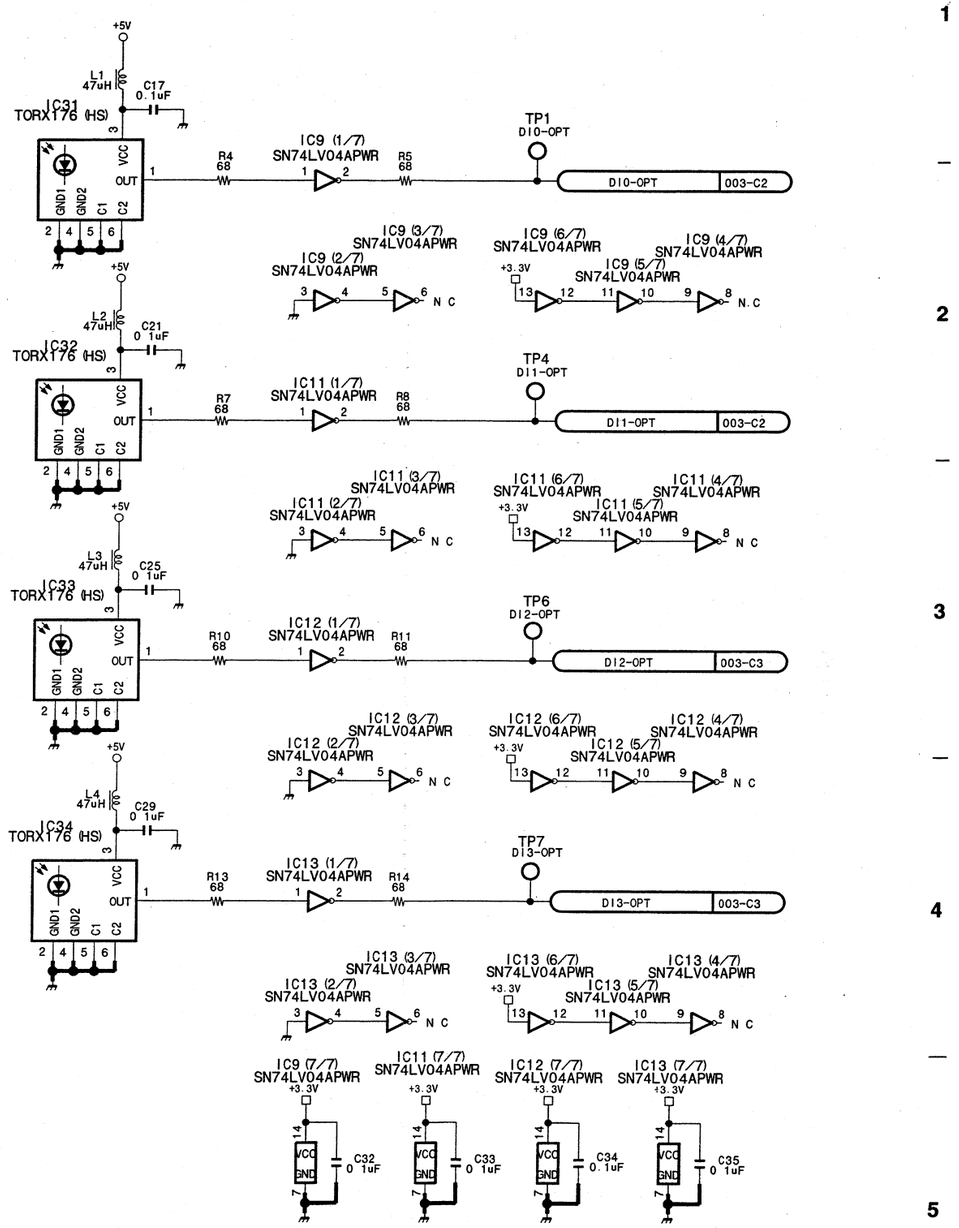

DI-35 (2/5)
BOARD NO. 1-675-895-12
GS-APX-397_DI-35_003_002

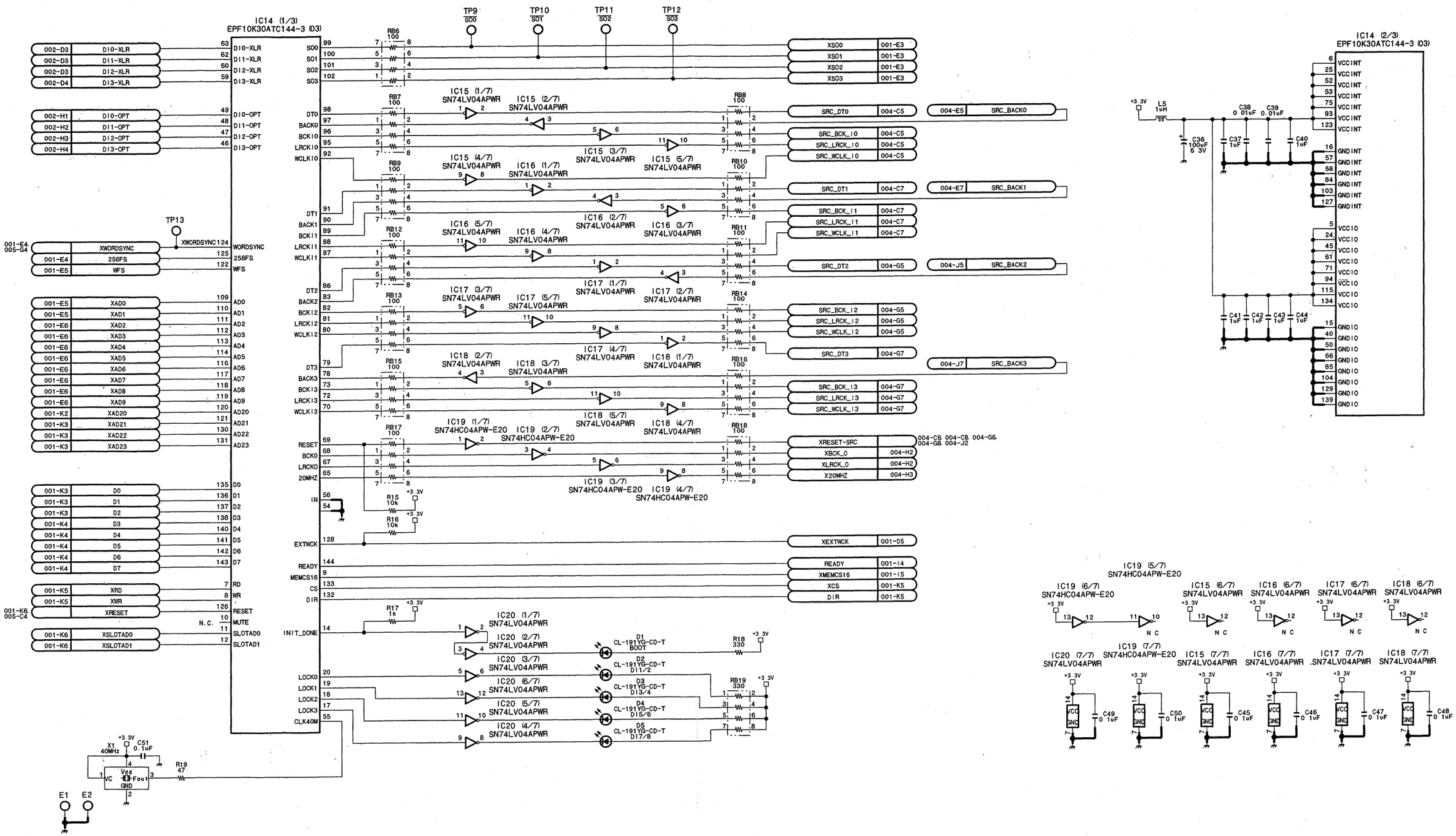

DI-35 (3/5)

BOARD NO. 1-675-895-12

GS-APX-397_DI-35_003_003

DI-35 (4/5)

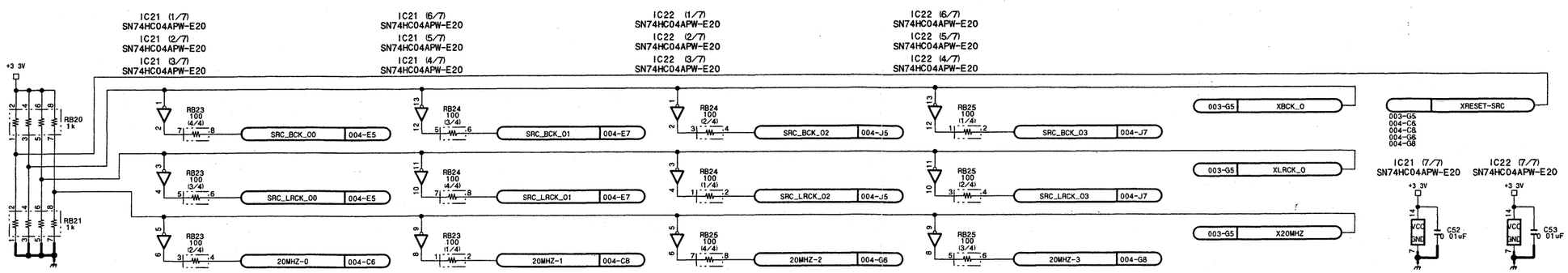

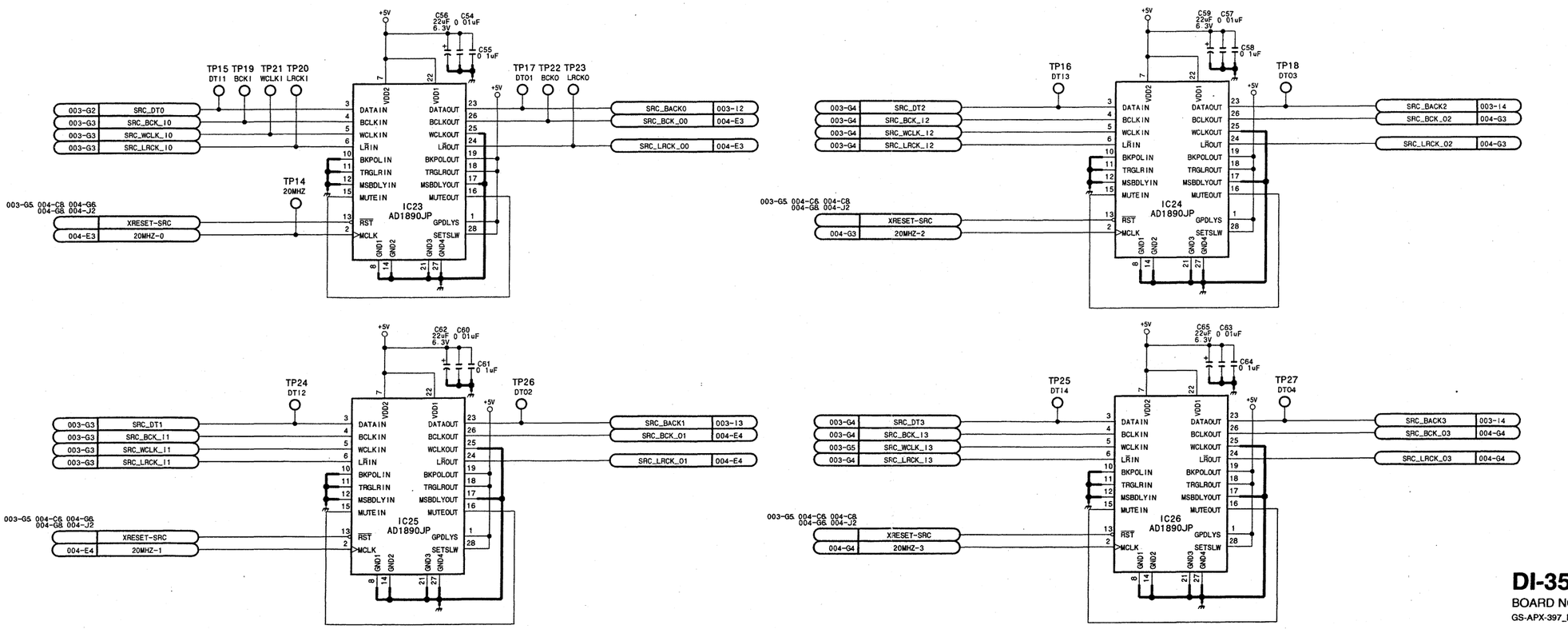

DI-35 (4/5)
BOARD NO. 1-675-895-12
GS-APX-397_DI-35_003_004

DMX-R100/V2

8-117 8-117

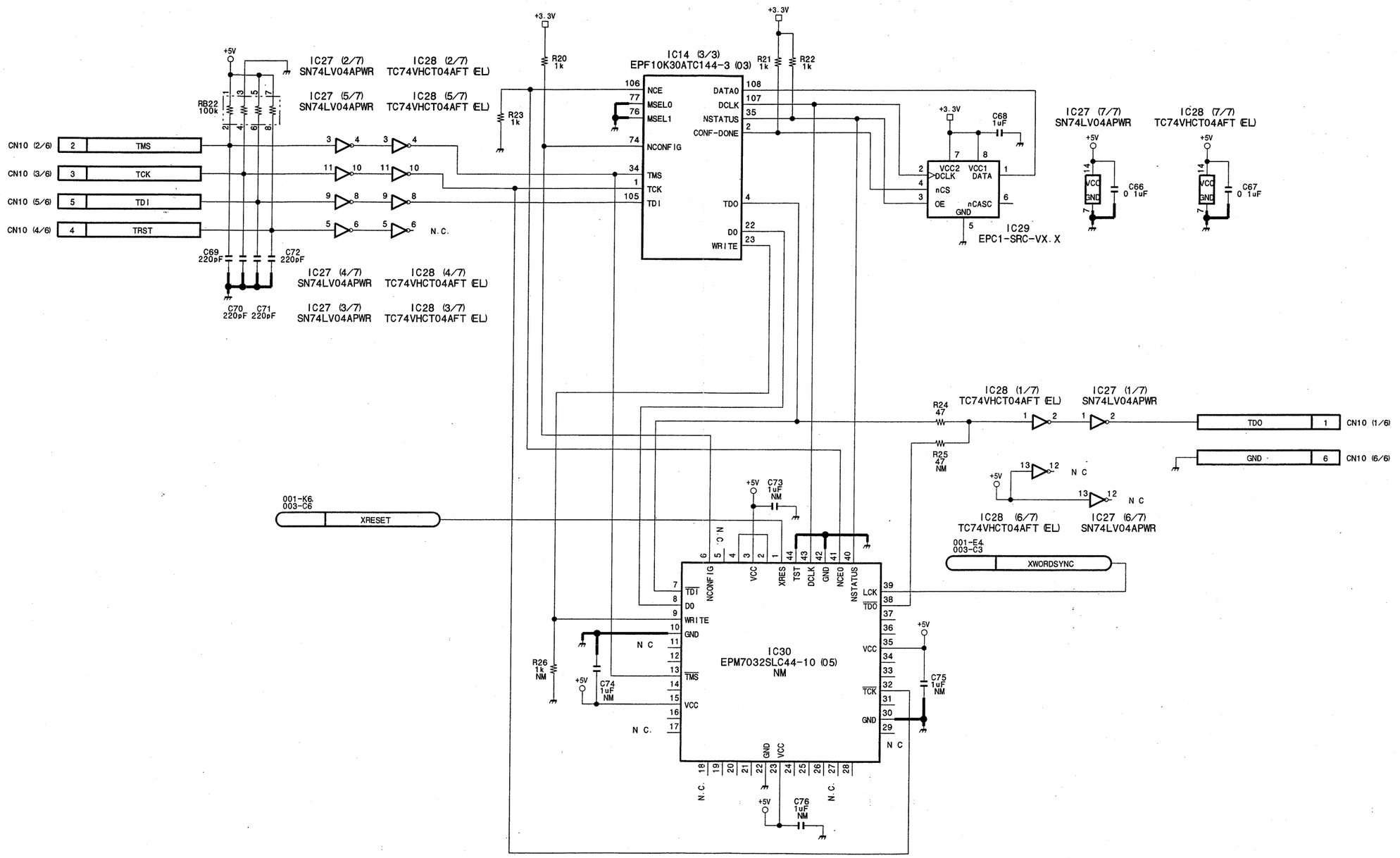

DI-35 (5/5)
BOARD NO. 1-675-895-12
GS-APX-397_DI-35_003_005

ADA-56 (1/5)

8-6. DMBK-R105 (ADA-56 board)

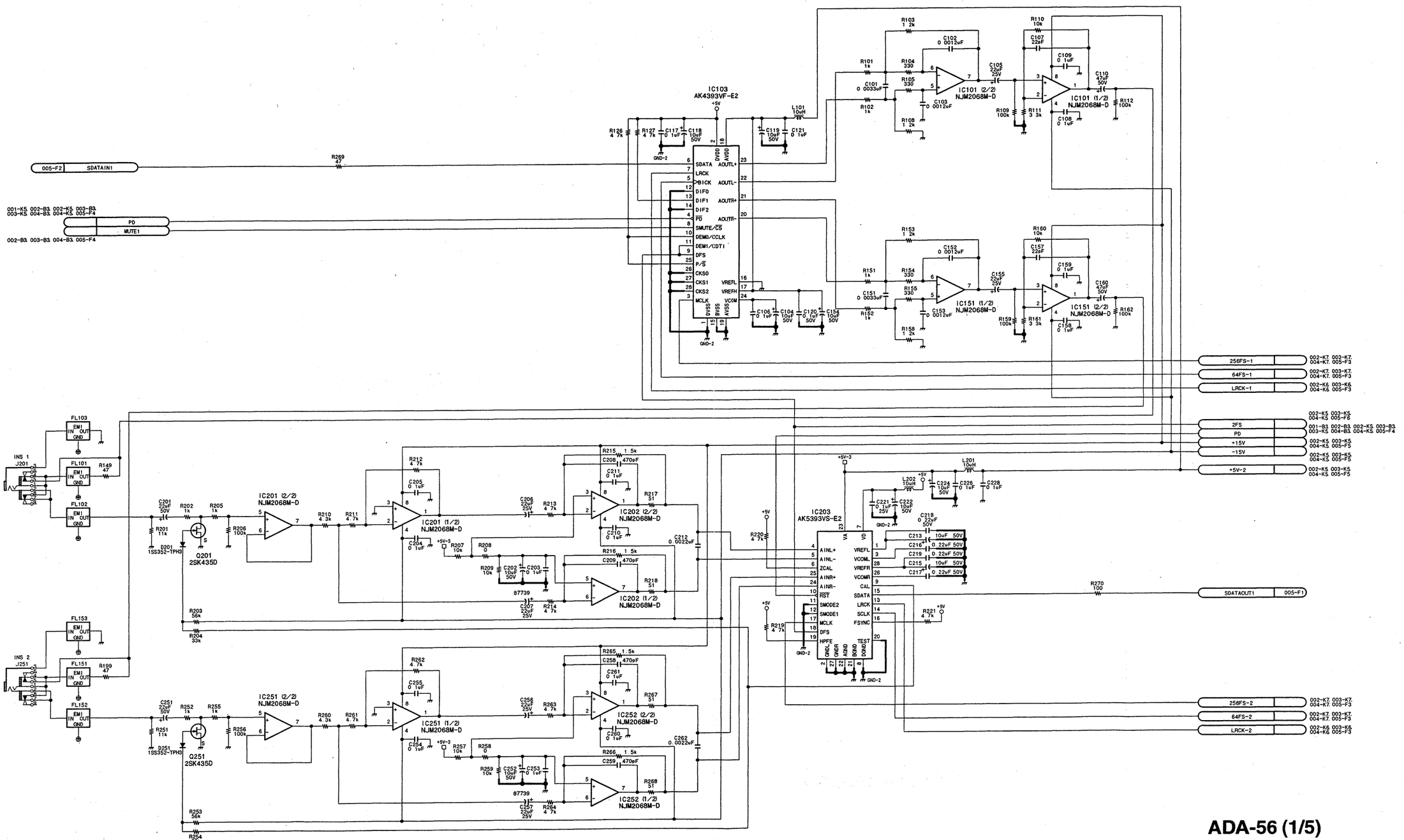

ADA-56 (1/5)
BOARD NO. 1-675-896-13
GS-APX-397_ADA-56_002_001

ADA-56 (2/5)

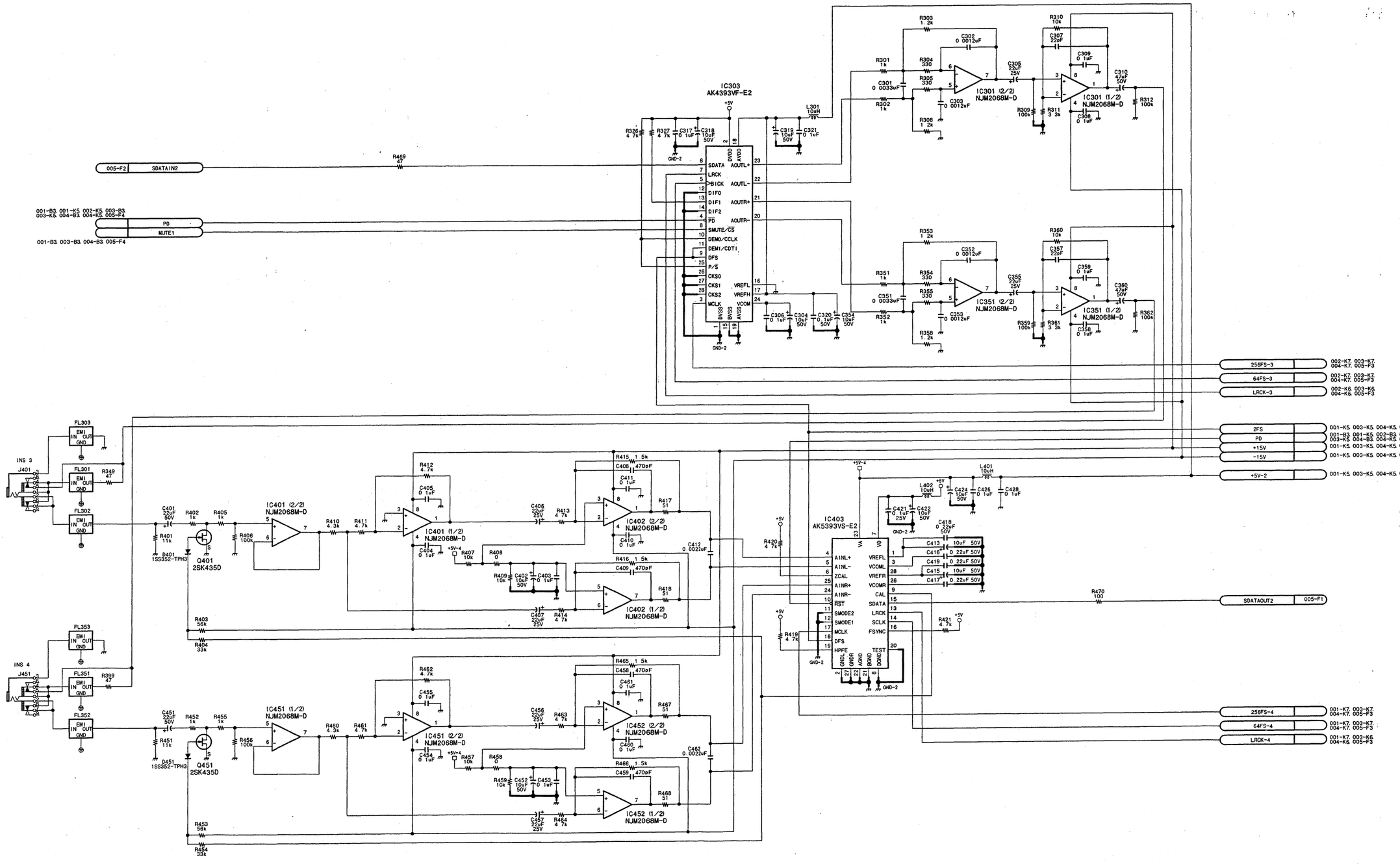

ADA-56 (2/5)

BOARD NO. 1-675-896-13

GS-APX-397_ADA-56_002_002

ADA-56 (3/5)

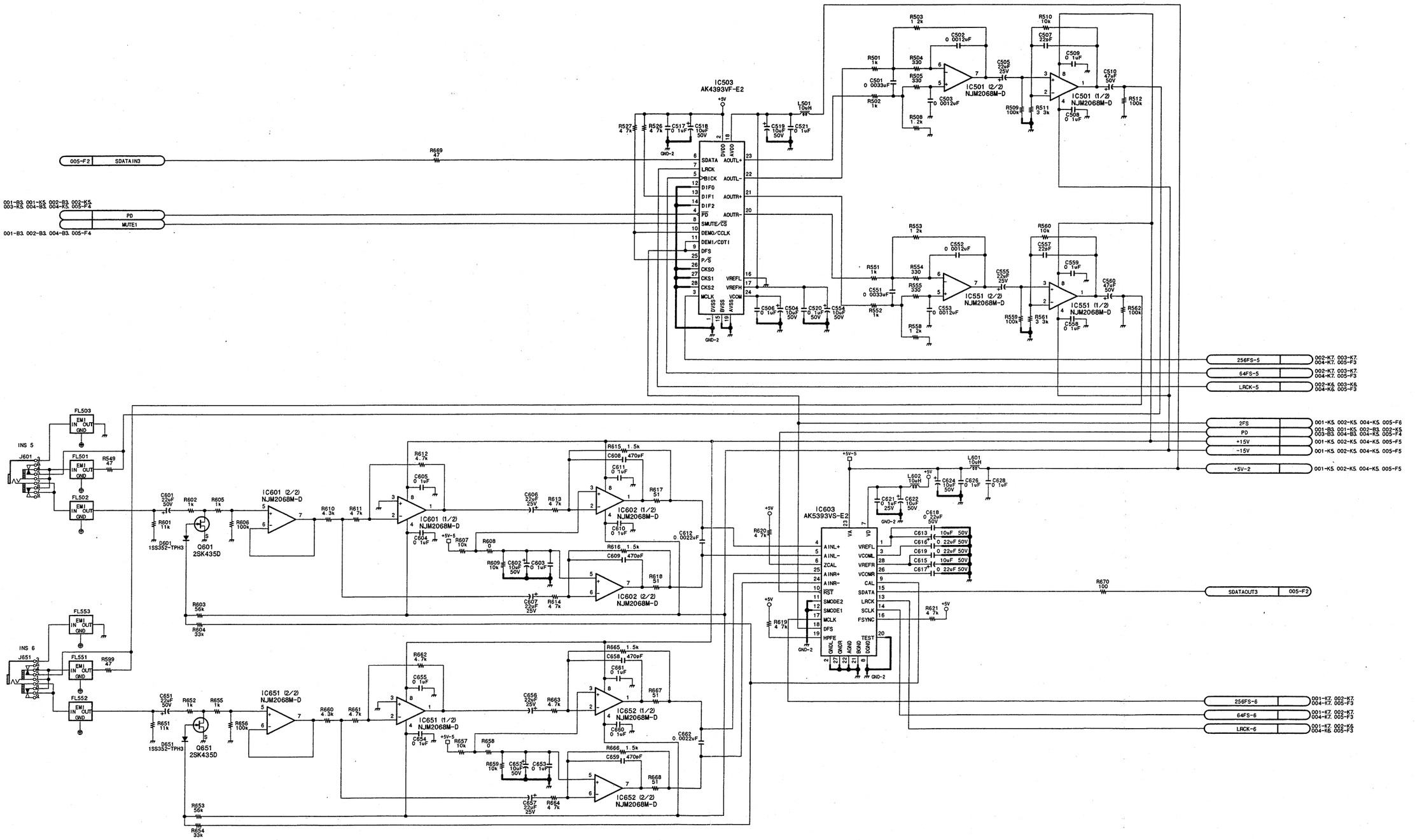

ADA-56 (3/5)

BOARD NO. 1-675-896-13

GS-APX-397_ADA-56_002_003

DMX-R100/V2

8-121 8-121

ADA-56 (4/5)

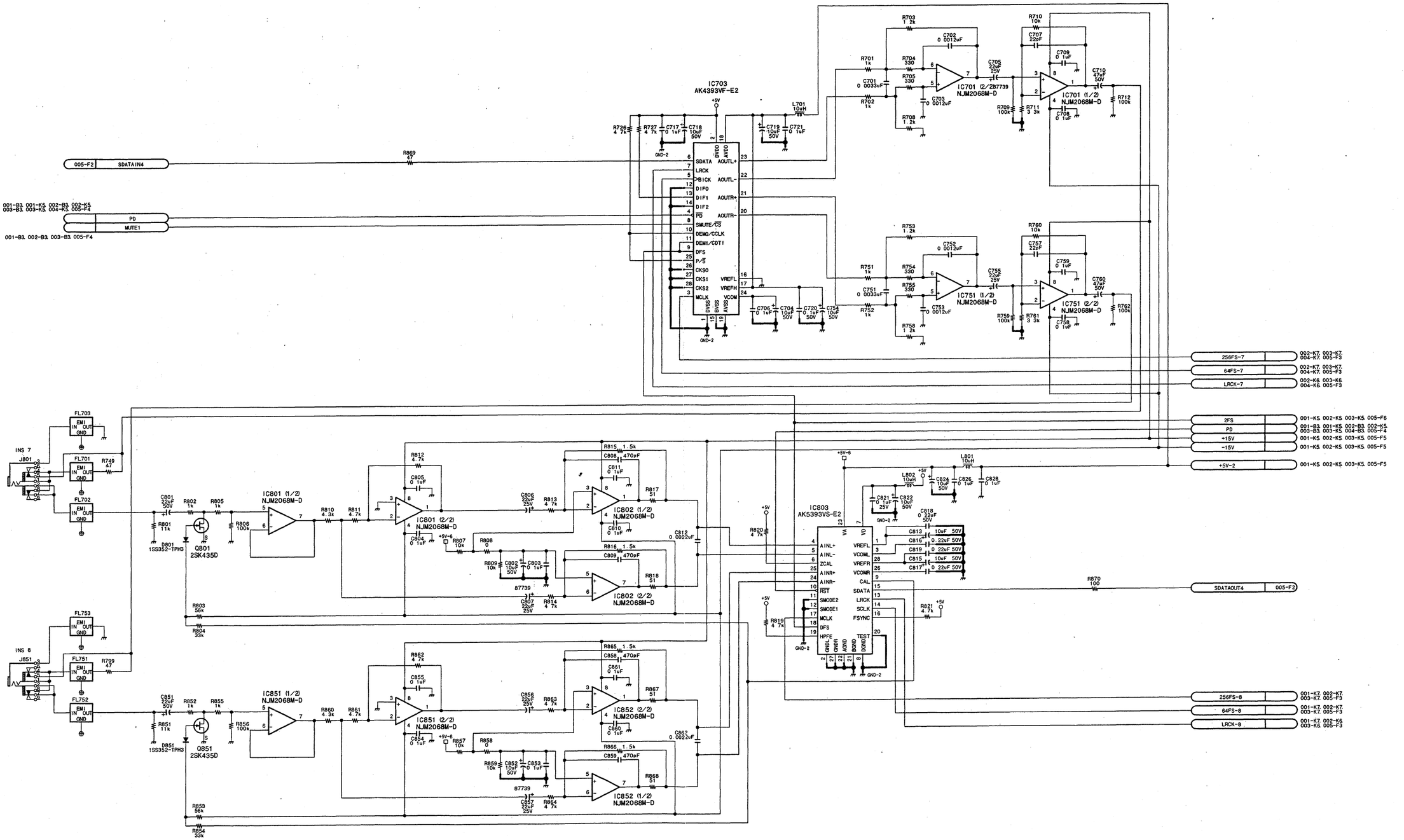

ADA-56 (4/5)

BOARD NO. 1-675-896-13

GS-APX-397_ADA-56_002_004

ADA-56 (5/5)

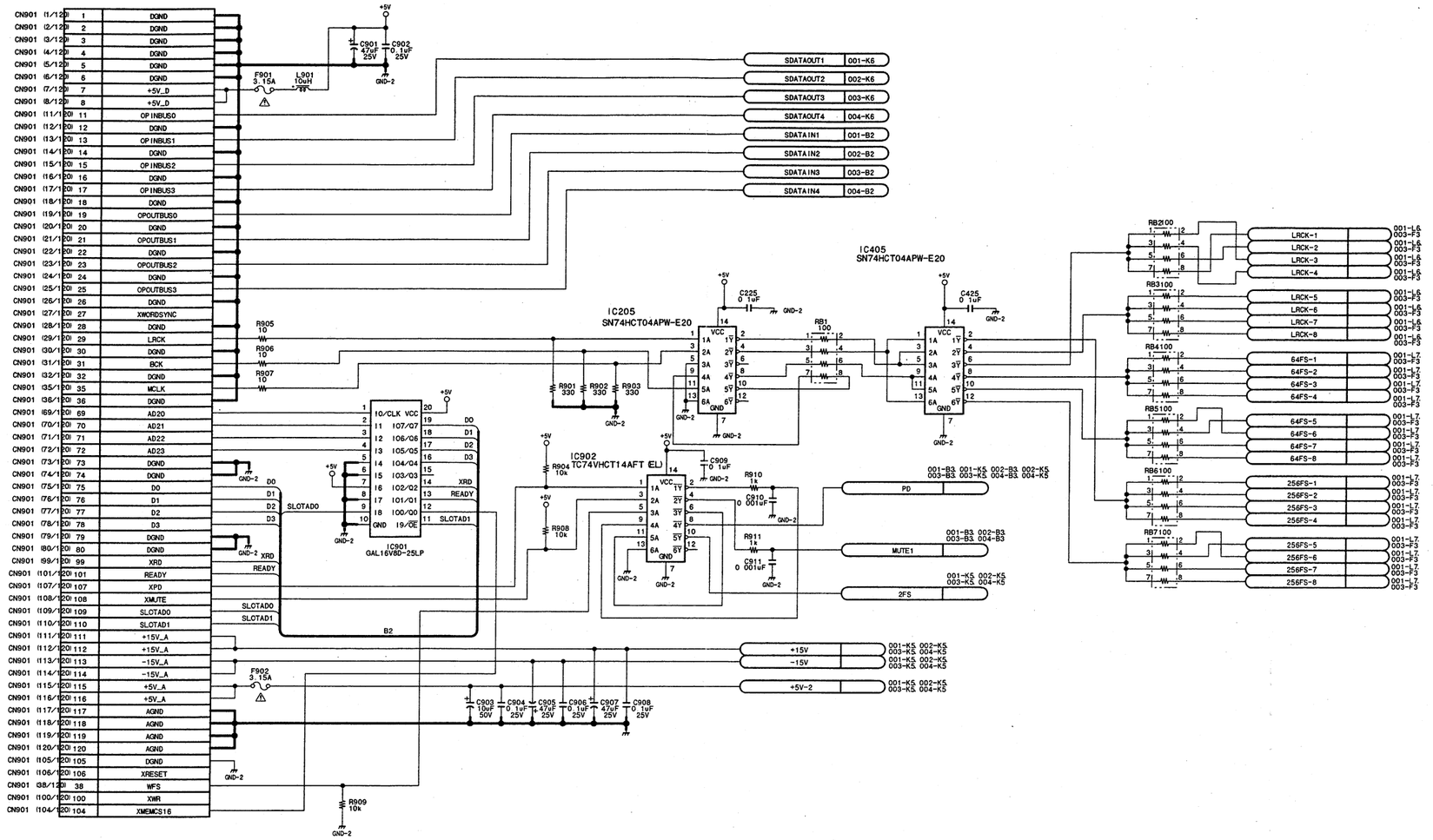

ADA-56 (5/5)
BOARD NO. 1-675-896-13
GS-APX-397_ADA-56_002_005

IF-736 (1/2)

8-7. DMBK-R106 (IF-736 board)

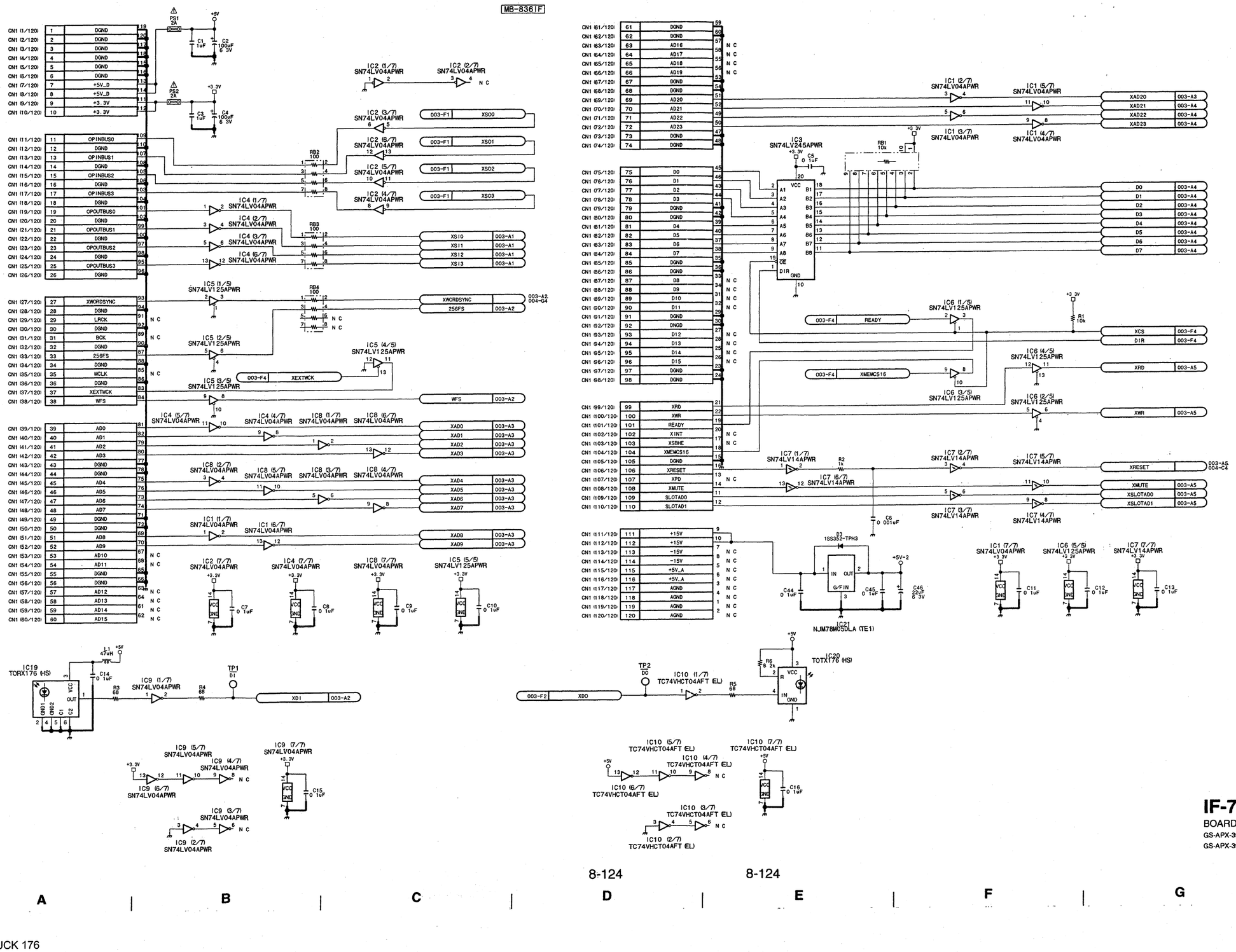

IF-736 (1/2)
BOARD NO. 1-675-897-12
GS-APX-397_IF-736_003_001
GS-APX-397_IF-736_003_002

8-124

DMX-R100/V2

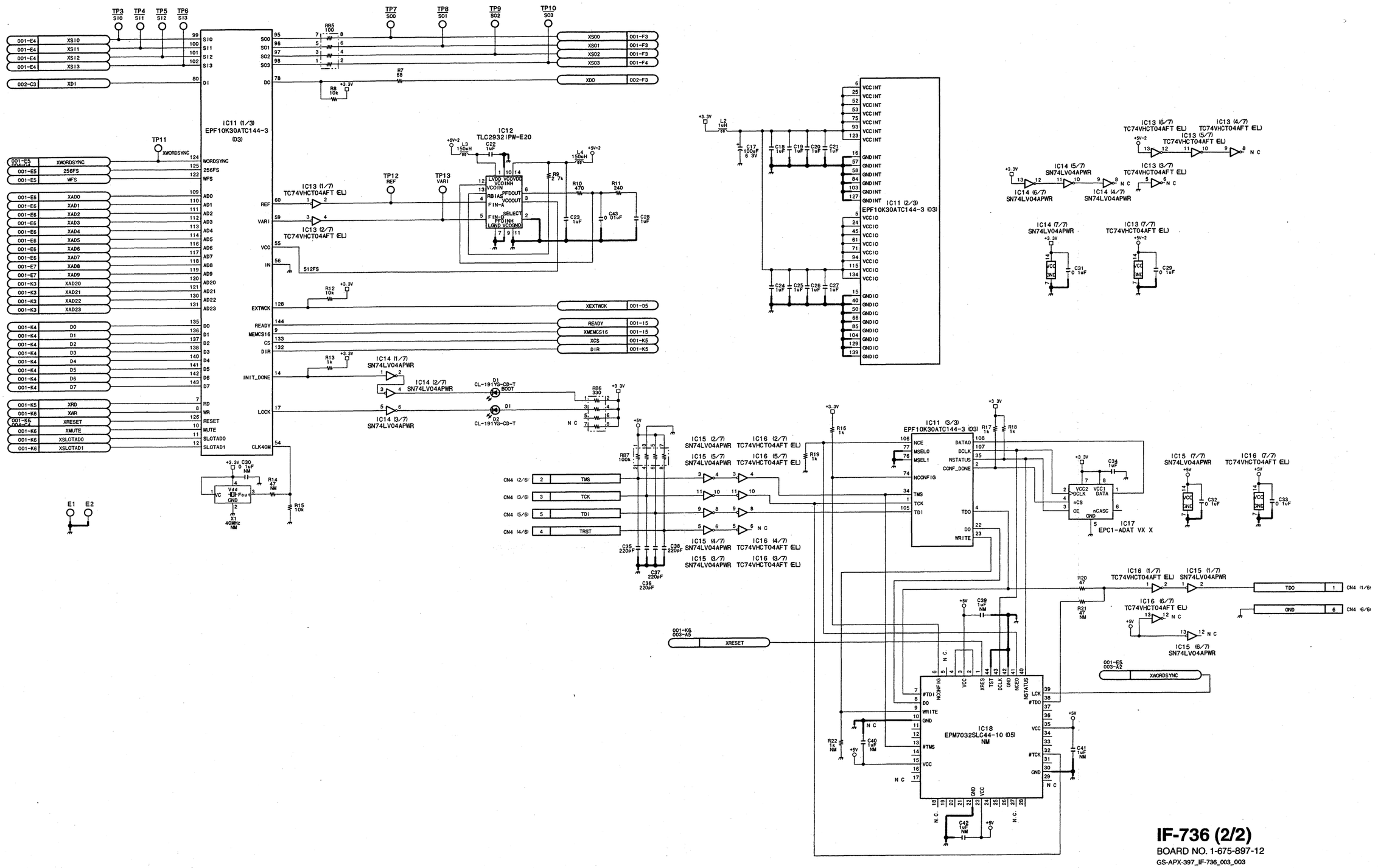

IF-736 (2/2)

BOARD NO. 1-675-897-12

GS-APX-397_IF-736_003_003

GS-APX-397_IF-736_003_004

DMX-R100/V2

IF-737 (1/4)

8-8. DMBK-R107 (IF-737 board)

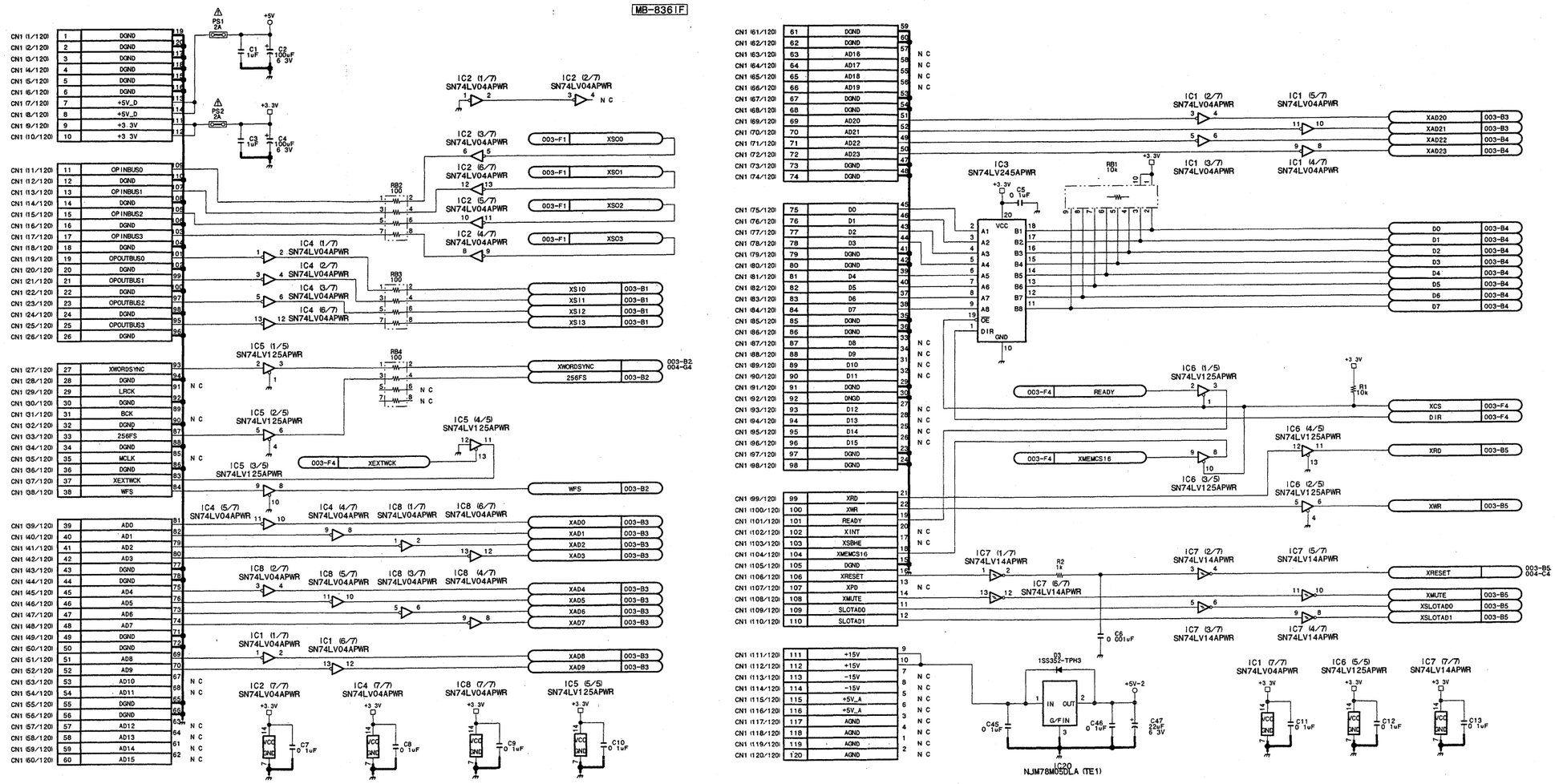

8-126

IF-737 (1/4)
BOARD NO. 1-675-898-12
GS-APX-397_IF-737_003_001

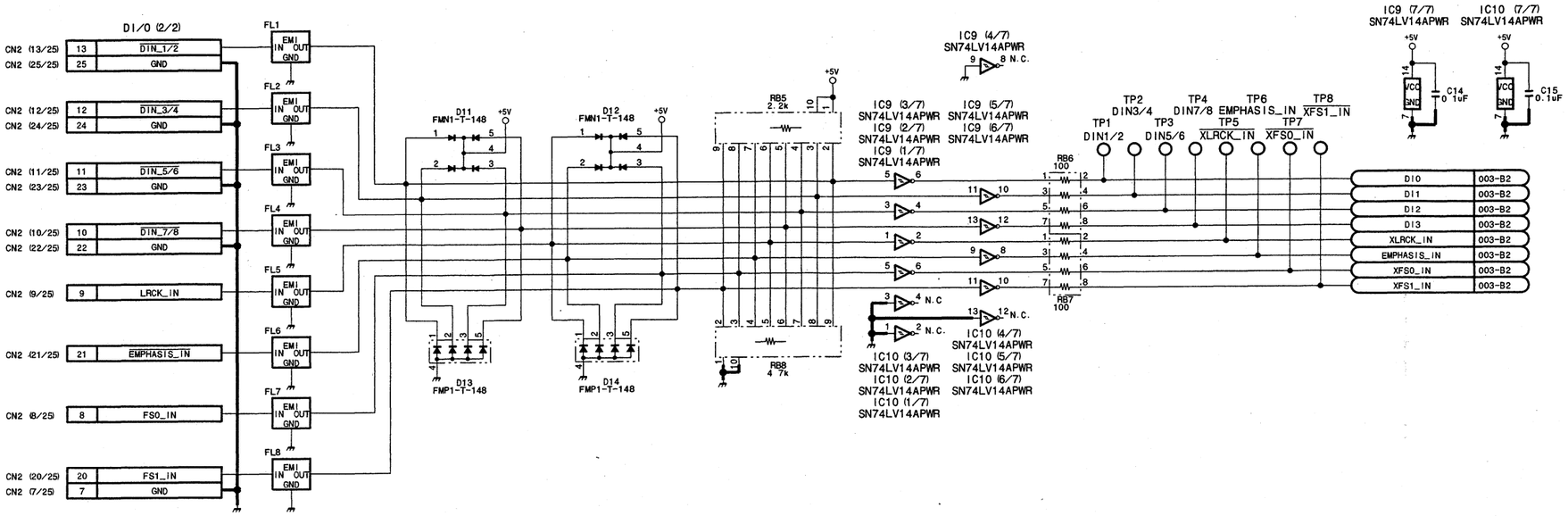

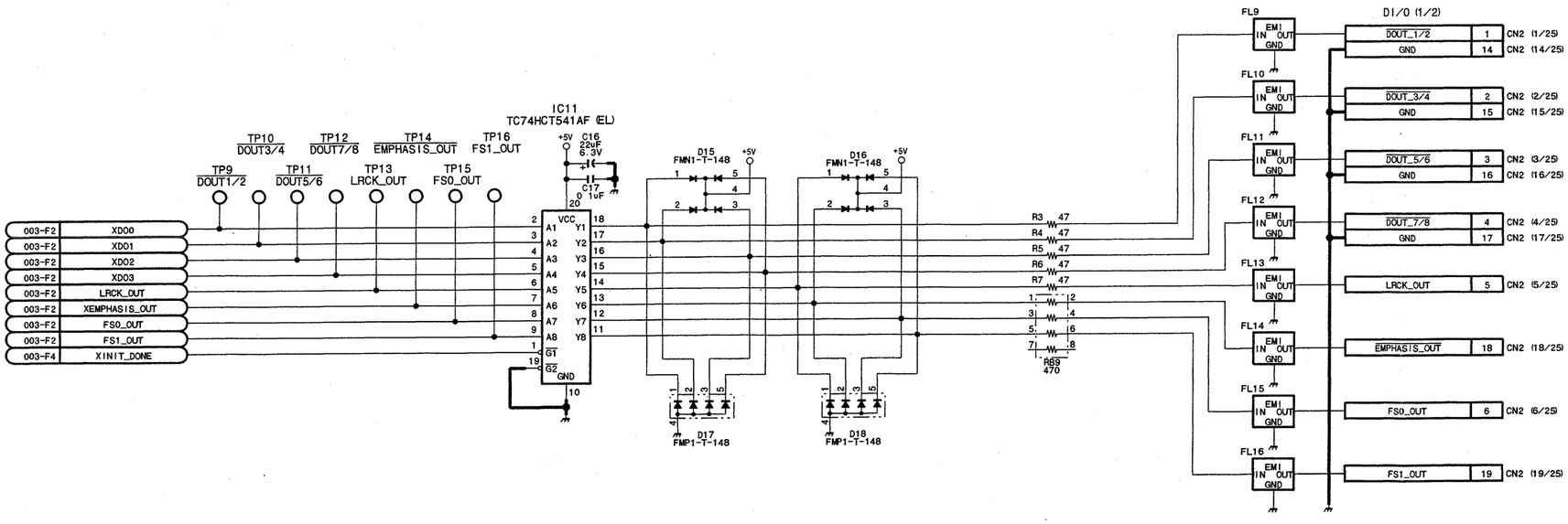

IF-737 (2/4)

BOARD NO. 1-675-898-12

GS-APX-397_IF-737_003_002

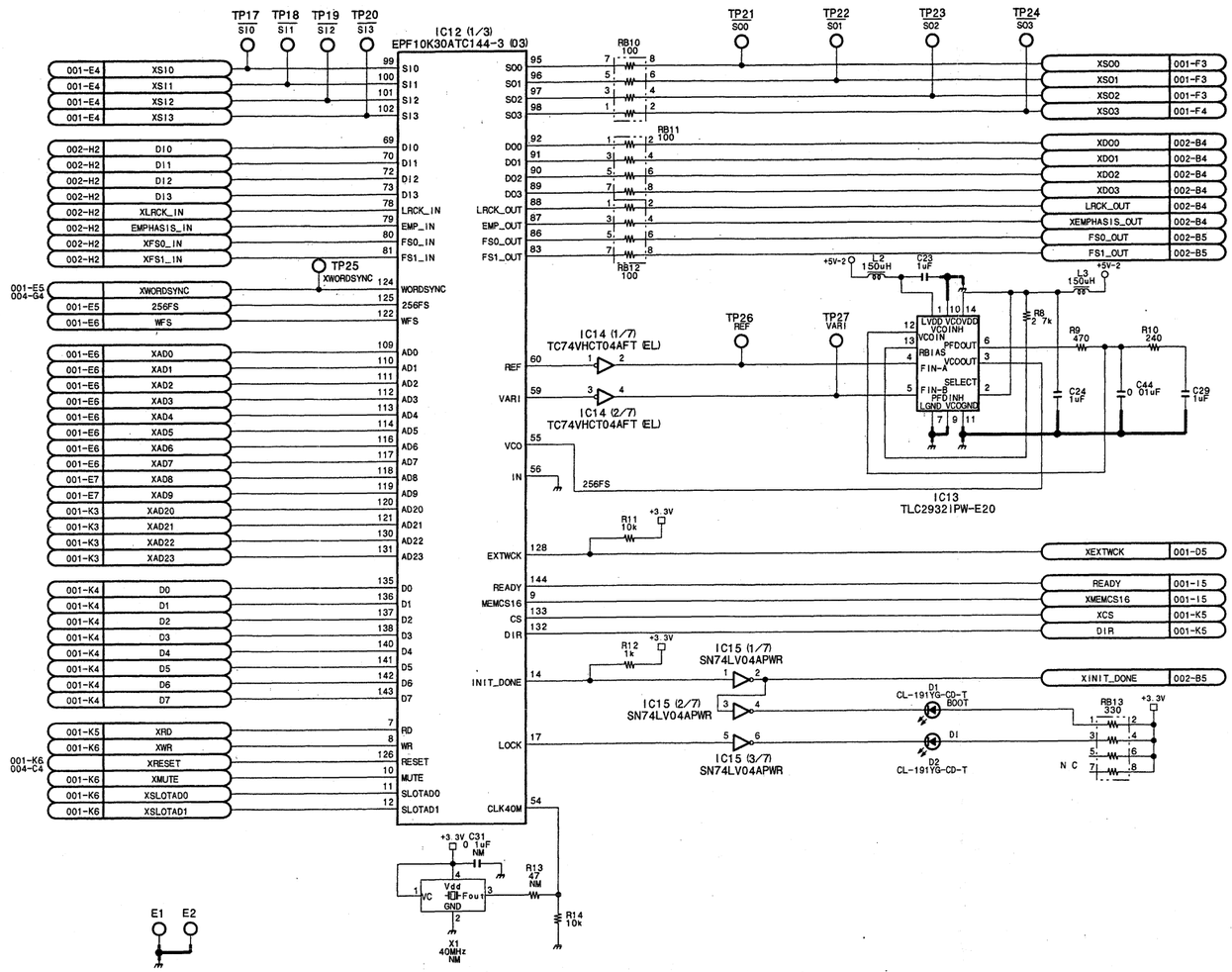

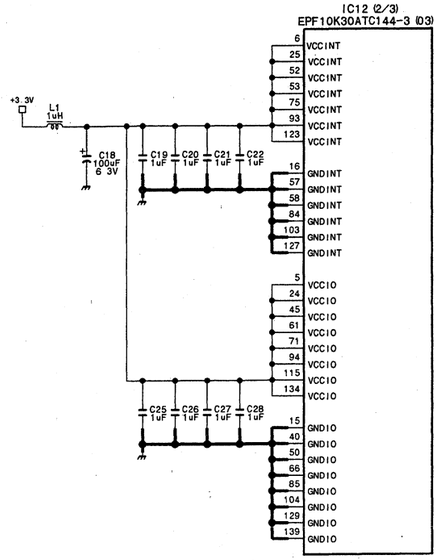

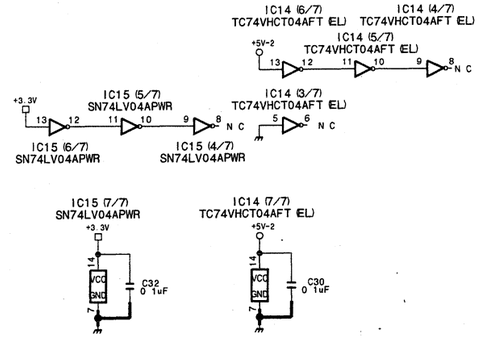

IF-737 (3/4)
BOARD NO. 1-675-898-12
GS-APX-397_IF-737_003_003

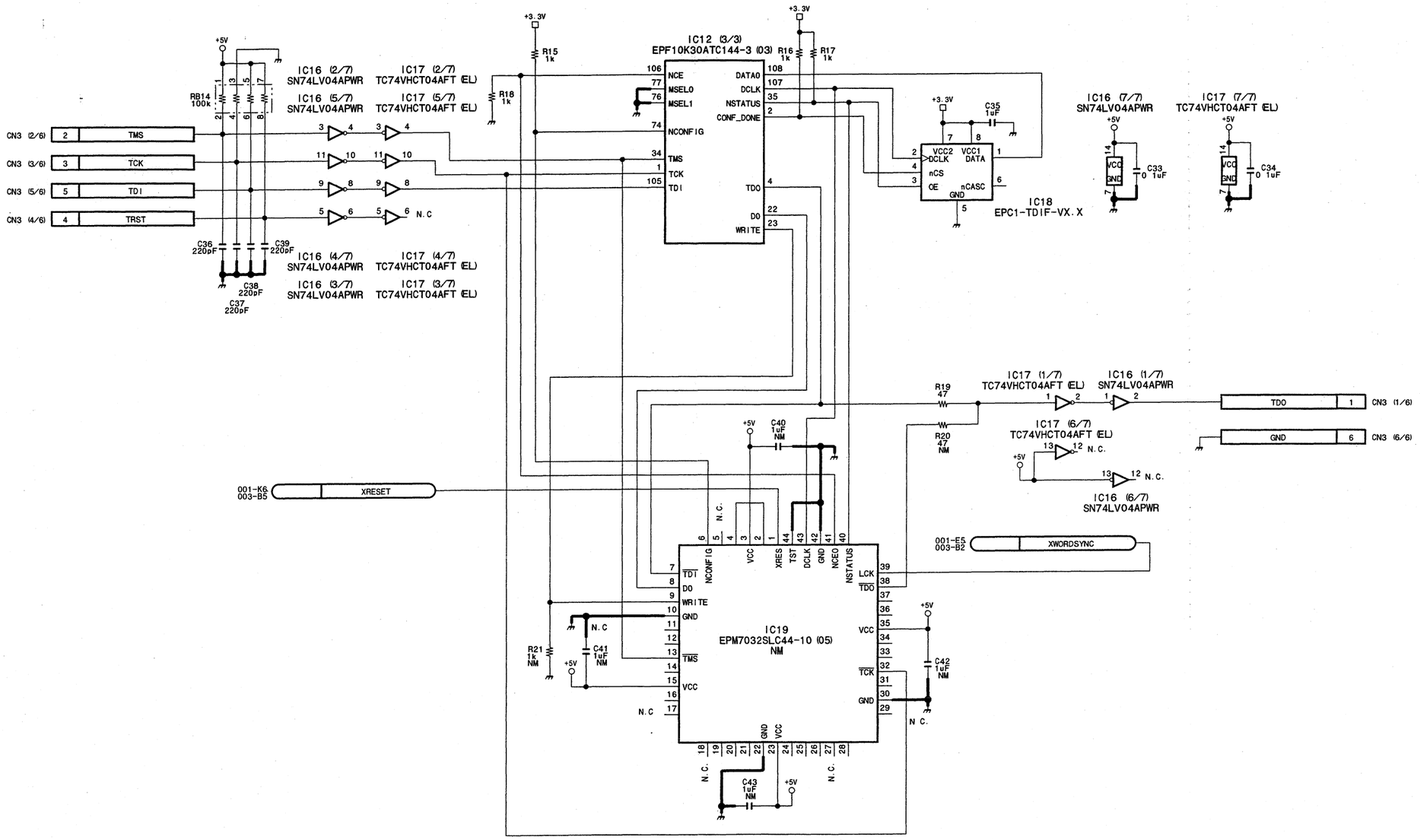

IF-737 (4/4)
BOARD NO. 1-675-898-12
GS-APX-397_IF-737_003_004

8-9. Frame Wiring

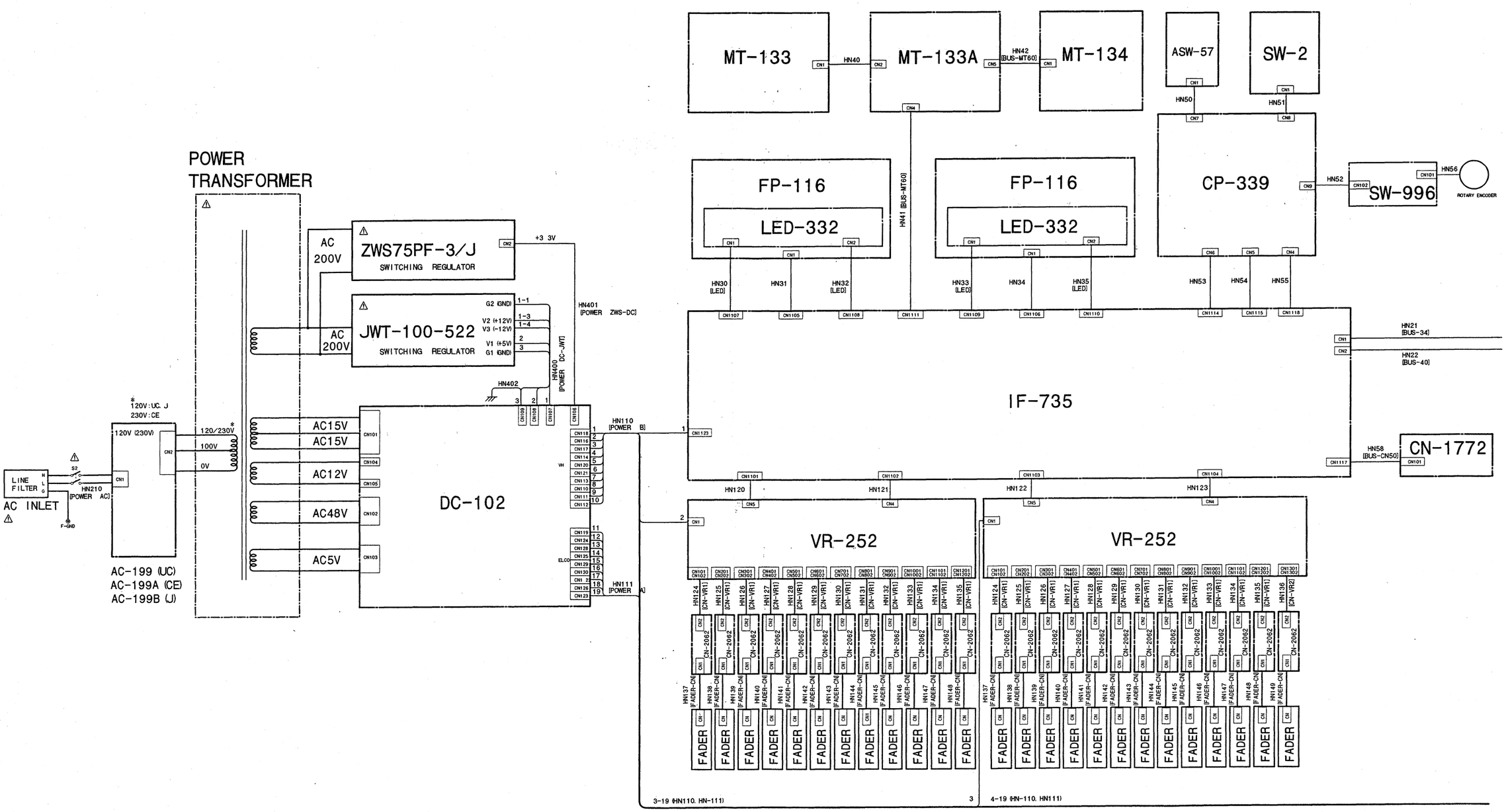

Frame Wiring, HP-94

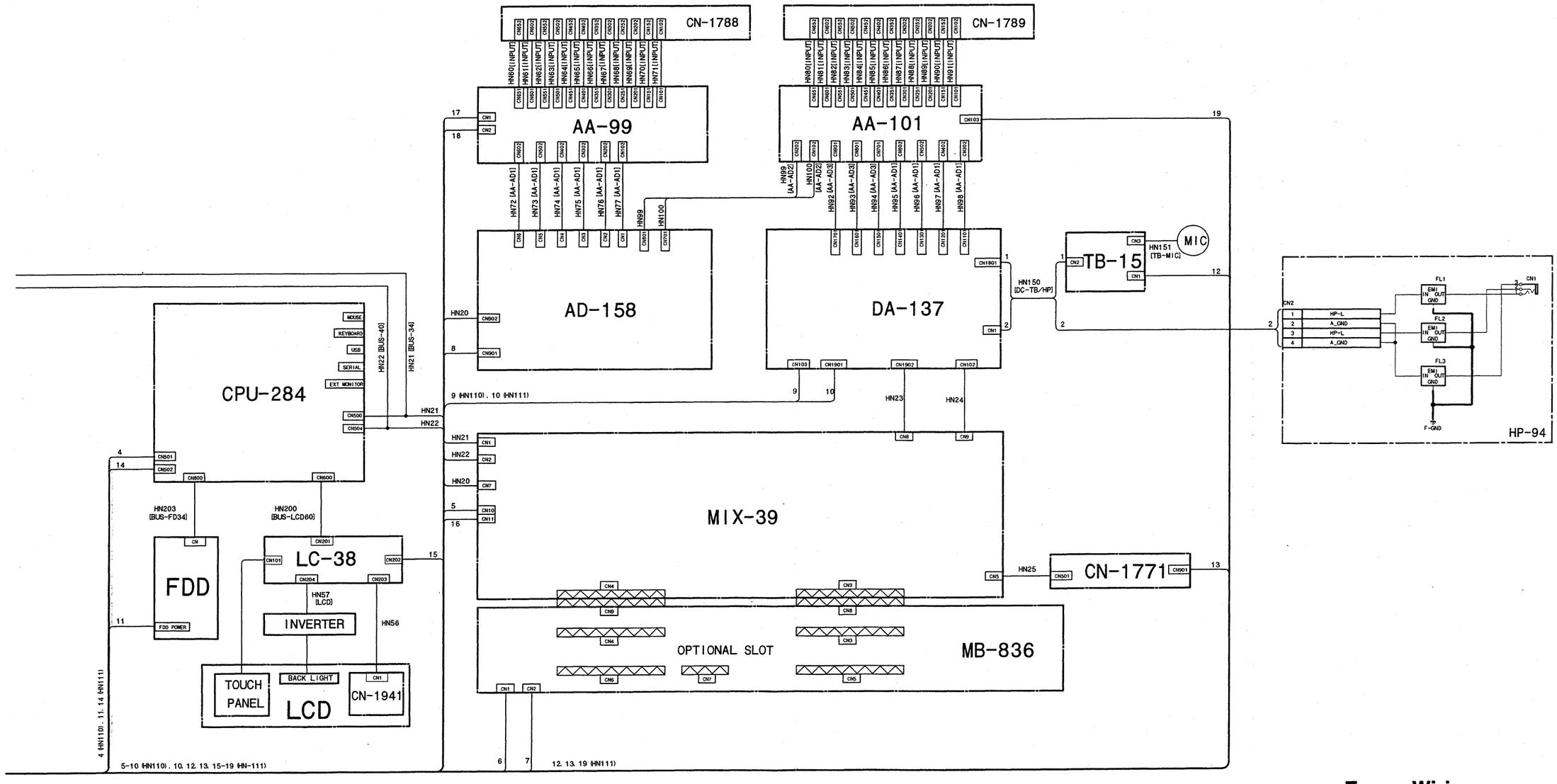

Frame Wiring
GS-APX-397_FRAME_001_002
HP-94
BOARD NO. 1-675-880-12
GS-APX-397_HP-94_001_001